ILLUSTRATED PARTS CATALOG

523 0021 005
15 MARCH 1960

VHF AIRCRAFT TRANSMITTER

17L-7

©COLLINS RADIO COMPANY
1960

CEDAR RAPIDS, IOWA, U.S.A.

PRINTED IN THE UNITED STATES OF AMERICA

Collins

ILLUSTRATED PARTS CATALOG

RECORD OF REVISIONS

Illustrated Parts Catalog - VHF Aircraft Transmitter 17L-7	LOCATION
ASSIGNED TO (JOB TITLE)	

REV. NO.	REVISION DATE	INSERTION DATE	BY	REV. NO.	REVISION DATE	INSERTION DATE	BY
1	15 Sept 60						

RETAIN THIS RECORD IN THE FRONT OF MANUAL OR CHAPTER.
ON RECEIPT OF REVISIONS, INSERT REVISED PAGES IN THE MANUAL, AND ENTER DATE INSERTED AND INITIALS.

Collins

ILLUSTRATED PARTS CATALOG

VHF AIRCRAFT TRANSMITTER 17L-7

SECTION I

INTRODUCTION

1. GENERAL.

This Illustrated Parts Catalog is a complete list of parts for the VHF Aircraft Transmitter 17L-7 (see figure 1), manufactured by Collins Radio Company. For servicing and for overhaul procedures, refer to the appropriate handbook of overhaul and maintenance instructions.

2. ALPHABETICAL TABLE OF CONTENTS.

Section II, Alphabetical Table of Contents, contains a list of all illustrations and sections of the Illustrated Parts Catalog with corresponding page numbers.

3. NUMERICAL PARTS LIST INDEX.

A. General. Section III, Numerical Parts List Index, consists of an alpha-numerical list of all part numbers listed in the Group Assembly Parts List. If a vendors part number and a Collins part number have been assigned, both numbers are shown in proper numerical sequence and both make reference to the applicable figure and index number.

B. Part Number Column. In this column are listed part numbers, which are the same as drawing numbers, for procurable parts and assemblies in the Group Assembly Parts List. The order of precedence beginning on the extreme left-hand position in part number numerical arrangement is as follows:

Letters A through Z
Numerals 0 through 9

(Alphabetical O's are considered numerical zeros.)

The order of precedence in continuing the part number arrangement in second and succeeding positions of the part number from left to right is as follows:

Space (blank column)
Diagonal (slant)/
Point (period).
Dash (-)
Letters A through Z
Numerals 0 through 9

(Alphabetical O's are considered as numerical zeros.)

C. Figure and Index Number Column. In this column the digits preceding the hyphen refer to the figure in the Illustrated Parts Catalog on which the parts or assemblies are illustrated. The digits following the hyphen are the index numbers or procurable parts or assemblies. The figure and index number shown in the Numerical Index is for the first occurrence only.

D. Quantity Per Article Column. Total quantity of parts or assemblies per equipment is listed in this column.

4. GROUP ASSEMBLY PARTS LIST.

A. General. Section IV, Group Assembly Parts List, consists of a breakdown of the complete unit into subassemblies and detailed parts. Each assembly is listed in its order of disassembly and is followed immediately by its component parts properly indented to show their relationship to the assembly. The Group Assembly Parts List breakdown furnished for the Illustrated Parts Catalog will be indented or coded to indicate item relationship, as follows:

1 2 3 4 5 6 7
INSTALLATION
. DETAIL PARTS FOR INSTALLATION
. ASSEMBLY
. ATTACHING PARTS FOR ASSEMBLY
. . . * . . .
. . DETAIL PARTS FOR ASSEMBLY
. . SUBASSEMBLY
. . ATTACHING PARTS FOR SUBASSEMBLY
. . . * . . .
. . . DETAIL PARTS FOR SUBASSEMBLY
. . . SUB-SUBASSEMBLY
. . . ATTACHING PARTS FOR SUB-SUBASSEMBLY
. . . * . . .
. . . . DETAIL PARTS FOR SUB-SUBASSEMBLY

Attaching parts are listed immediately following the parts which they attach. Items which are made from raw stock such as cut lengths of wire, solder, varnish, lacing cord and flexible tubing are not included in the Group Assembly Parts List.

B. Figure and Index Number Column. In this column the digits preceding the hyphen refer to the figure number on which the parts or assemblies are illustrated. The digits following the hyphen are the index numbers of the parts and assemblies. The index numbers are used to locate a part after it has been found in the Numerical Index.

C. Part Number Column. In this column are MIL part numbers, part numbers of vendors, or Collins part numbers. When more than one part number is available the preference will be MIL, vendor and Collins in that order. Vendors' part numbers listed in the part number column are subject to change without notice.

D. Proprietary Items. Proprietary items are coded "P" in the part number column.

E. Nomenclature Column. In this column is listed each assembly, its attaching parts, and components of the assembly, properly indented to show their relationship to the assembly. If a part is purchased by Collins Radio from a vendor, the Federal Manufacturer's Code number, preceded by the letter V, is listed in this column. The vendor's part number will be listed in the part number column and the Collins Radio part number will be enclosed by dashes in the Nomenclature Column. If this column does not include a Federal Manufacturer's code number, the part number listed is a Collins Radio part number. Symbol designations, where applicable, will be listed as the last item in this column.

F. Usage Code Column. Part variations within different models of the same equipment are indicated in the Usage Code Column. In cases where this column has been left blank, the part listed would apply to all models of equipment covered by this publication.

G. Units Per Assembly Column. This column lists the quantity of subassemblies or parts required in the next higher assembly. The quantities specified, therefore, are not necessarily the total used per equipment. For totals per equipment, refer to Section III, Numerical Parts List Index. The letters "AR" denote that the selection of a part or parts should be made "as required." "REF" refers to an assembly which is completely assembled on a preceding illustration: In this case a notation in the description column refers to the illustration on which the assembly is shown completely assembled and indexed.

5. REVISIONS.

Periodically the Illustrated Catalog is revised to cover additions, deletions, or changes to the equipment. These revisions are indicated by either an "R" or a vertical bar, whichever is more practical. These revision symbols are applicable to the current revision only.

Collins

ILLUSTRATED PARTS CATALOG

VENDORS' CODE - NAME INDEX

	CODE	VENDORS' NAME AND ADDRESS
	01121	ALLEN-BRADLEY COMPANY MILWAUKEE, WISCONSIN
R	02697	PARKER SEAL CO. CLEVELAND, OHIO
	16688	DEJUR AMSCO CORPORATION LONG ISLAND CITY, NEW YORK
	16758	DELCO RADIO DIVISION OF GENERAL MOTORS CORPORATION KOKOMO, INDIANA
	24446	GENERAL ELECTRIC COMPANY SCHENECTADY, NEW YORK
	25140	GLOBE INDUSTRIES, INC. DAYTON, OHIO
	53021	SANGAMO ELECTRIC CO. SPRINGFIELD, ILLINOIS
	56289	SPRAGUE ELECTRIC CO. NORTH ADAMS, MASS.
	60380	TORRINGTON COMPANY, THE TORRINGTON, CONNECTICUT
	70417	AMPLEX DIVISION OF CHRYSLER CORPORATION DETROIT, MICHIGAN
	71279	CAMBRIDGE THERMIONIC CORP. CAMBRIDGE, MASS.
	71590	CENTRALAB DIVISION OF GLOBE UNION, INCORPORATED MILWAUKEE, WISCONSIN
	71785	CINCH MFG. CORPORATION CHICAGO, ILLINOIS
	72136	ELECTRO MOTIVE MFG. CO. WILLIMANTIC, CONN.
	72512	HARRY DAVIES MOLDING CO. CHICAGO, ILLINOIS
	72962	ELASTIC STOP NUT CORP. OF AMERICA UNION, NEW JERSEY
	72982	ERIE RESISTOR CORPORATION ERIE, PENNSYLVANIA
	73293	HUGHES AIRCRAFT CO. HOUSTON, TEXAS
	73899	JFD MFG. CO., INC. BROOKLYN, NEW YORK
	74868	INDUSTRIAL PRODUCTS CO. DANBURY, CONNECTICUT
	74970	E. F. JOHNSON COMPANY WASECA, MINNESOTA
	75618	LION FASTENER, INC. HONEOYE FALLS, NEW YORK
	77147	PATTON-MACGUYER COMPANY PROVIDENCE, RHODE ISLAND
	77523	RBM MANUFACTURING COMPANY FORT WAYNE, INDIANA
	78189	SHAKEPROOF, INCORPORATED CHICAGO, ILLINOIS
	79136	WALDES KOH-I-NOOR, INCORPORATED LONG ISLAND CITY, NEW YORK
	80008	ELECTRO ENGINEERING WORKS OAKLAND, CALIFORNIA
	80368	SYLVANIA ELECTRIC PRODUCTS, INC. NEW YORK, NEW YORK
	81349	MILITARY SPECIFICATIONS NO ADDRESS
	81350	JOINT ARMY-NAVY SPECIFICATIONS NO ADDRESS
	81716	OAK MANUFACTURING COMPANY CRYSTAL LAKE, ILLINOIS
	82142	JEFFERS ELECTRONICS DIVISION DUBOIS, PENNSYLVANIA
	83086	NEW HAMPSHIRE BALL BEARING, INC. PETERBOROUGH, NEW HAMPSHIRE
	86684	RCA VICTOR DIVISION OF RADIO CORPORATION OF AMERICA HARRISON, NEW JERSEY
	88044	AERONAUTICAL STANDARDS GROUP, DEPT. OF NAVY AND AIR FORCE WASHINGTON, D. C.
	88063	COMMUNICATION ACCESSORIES CO. HICKMAN MILLS, MISSOURI
	91578	CANNON ELECTRIC COMPANY LOS ANGELES, CALIFORNIA
	91637	DALE PRODUCTS, INCORPORATED COLUMBUS, NEBRASKA
	91662	ELCO CORPORATION PHILADELPHIA, PENNSYLVANIA
	91929	MINNEAPOLIS-HONEYWELL REGULATOR COMPANY, MICRO SWITCH DIVISION

VENDORS' CODE - NAME INDEX (CONT)

CODE	VENDOR'S NAME AND ADDRESS
92825	WHITSO, INCORPORATED CHICAGO, ILLINOIS
94989	GENERAL ELECTRIC COMPANY SCRANTON, PENNSYLVANIA
96906	MILITARY STANDARDS NO ADDRESS
97315	BALLASTRAN CORPORATION FORT WAYNE, INDIANA
97965	CHICAGO STANDARD TRANSFORMER COMPANY CHICAGO, ILLINOIS
97966	CBS-HYTRON DANVERS, MASSACHUSETTS
98278	MICRODOT, INCORPORATED SOUTH PASADENA, CALIFORNIA
98291	SEALECTRO CORPORATION MAMARONECK, NEW YORK
99180	TRANSITRON ELECTRONIC CORP. MELROSE, MASSACHUSETTS

Collins
ILLUSTRATED PARTS CATALOG

HOW TO USE THIS ILLUSTRATED PARTS CATALOG

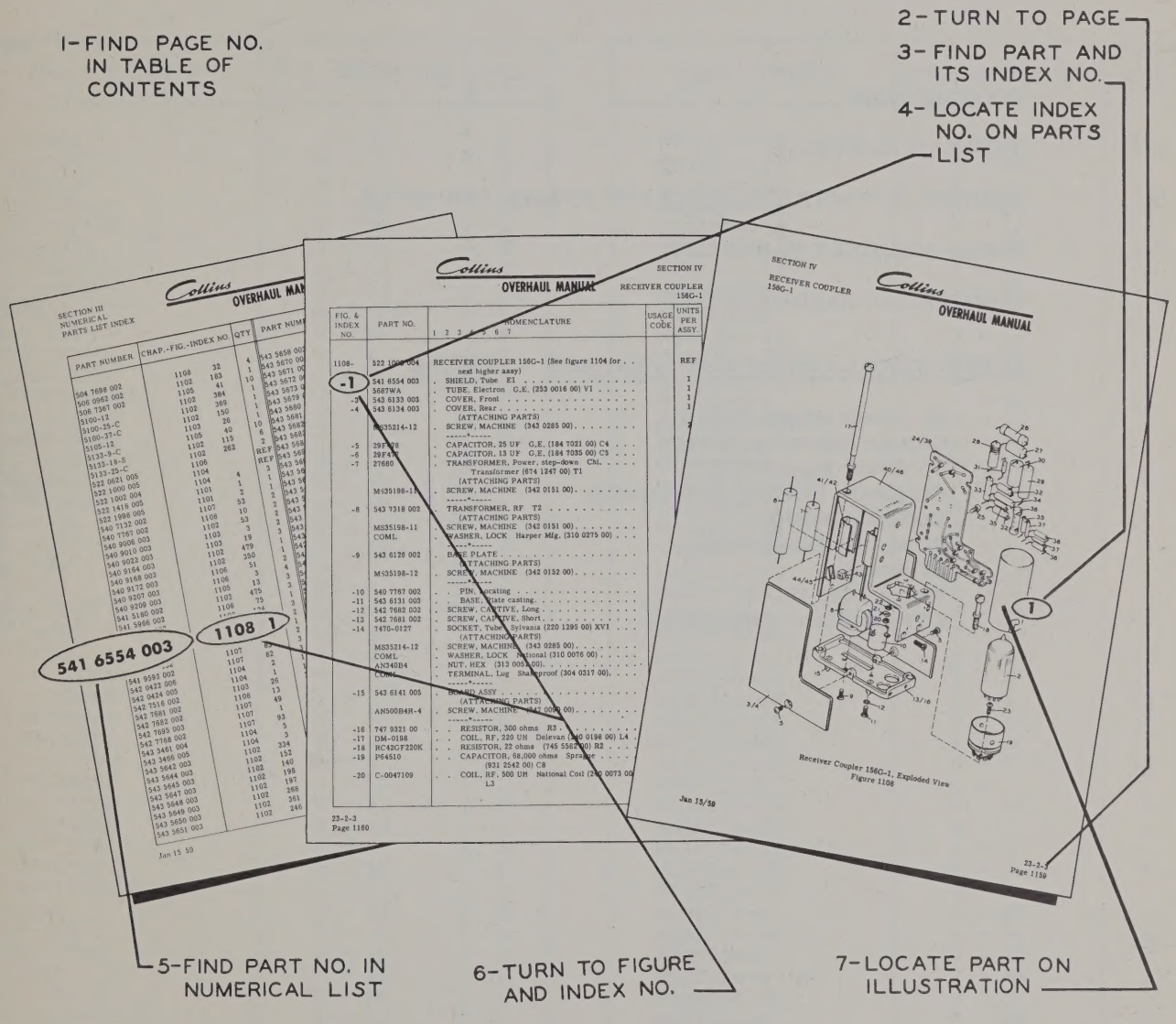

HOW TO FIND THE PART NUMBER IF THE SECTION OR SYSTEM OF THE EQUIPMENT IN WHICH THE PART IS USED IS KNOWN:

(1) Turn to the Table of Contents and find the page number for the Major Assembly or System in which the part is used.

(2) Turn to the page determined in step (1).

(3) Locate the part and its index number on the illustration.

(4) Find the index number on the Group Assembly Parts List page to determine complete description.

HOW TO FIND THE ILLUSTRATION FOR A PART IF THE PART NUMBER IS KNOWN:

(5) Refer to the Numerical Index and find the part number.

(6) Turn to the Parts List and find the figure and index number indicated in the Numerical Index for that part.

(7) On the face of the illustration, find the index number determined in step (6).

SECTION II

TABLE OF CONTENTS

Section		Page
I	INTRODUCTION	1
II	TABLE OF CONTENTS	6
III	NUMERICAL PARTS LIST INDEX AND SYMBOL LIST INDEX	7
IV	GROUP ASSEMBLY PARTS LIST	14B
V	COMMERCIAL HARDWARE LIST	48

ALPHABETICAL LIST OF ILLUSTRATIONS	FIGURE	
AC Power Supply 516C-1	2	15
Chassis Assembly, Wired	9	42
DC Power Supply 516D-1	3	17
Frequency Selector, Subassembly	7	29/30
Modulator Module	4	20
RF and PA Subassembly	8	36
RF Module	5	24
Transmitter 17L-7	1	14
VHF Oscillator Subassembly	6	26

SECTION III

NUMERICAL PARTS LIST INDEX

PART NUMBER	FIG. -INDEX NO.	QTY.
A-110-1	7 - 61	1
AN340C2	9 - 33	3
AN340C4	9 - 42	3
AN340C6	9 - 1	4
AN345B-416	8 - 59	1
AN345B10	9 - 44	2
AN500B4R-2	9 - 61	8
AN500B4R-3	9 - 63	4
AN500B4R-4	8 - 40A	4
AN500C4-12	6 - 4	6
AN500C4-5	4 - 6	8
AN500C4-8	7 - 6	2
AN500C6R-24	7 - 116	2
AN500C6R-3	7 - 1	1
AN500C6R-5	7 - 1	2
AN936A516	8 - 55	2
AN936B4	9 - 42	3
AN936B4B	8 - 69	2
AN936B6	9 - 41	1
BC-2185	3 - 19	1
BC1536	4 - 7	1
BC2007	4 - 8	1
BR512S-BC	8 - 9	1
B11-W1K	8 - 64	1
B11-W5K	8 - 65	2
CC20CH070D	9 - 72	1
CC20CH080D	9 - 71	1
CC20CH090D	9 - 73	2
CC20CH120J	8 - 56	1
CC20CK010D	6 - 3	1
CC20CK020D	6 - 50	1
CC20LH150G	8 - 33	1
CC30CH200J	8 - 38	1
CK61Y102Z	6 - 5	6
CK62Y472Z	8 - 32	1
CK63Y103Z	9 - 43	1
DA-15P	4 - 38	2
DAF-15S-1	9 - 54	3
DA934-035	6 - 45	1
DB-25P	7 - 33	1
DBF-25S-1	9 - 55	1
DPA-22000-152	9 - 52	1
DPA-24HV2-34P	9 - 53	1
DT4-18	4 - 31	2
D26909	2 - 6	1
D26914	3 - 25	1
E9930	2 - 3	1
E9931	2 - 2	1
FT-SM-1	8 - 40B	3
FT-SM-14	8 - 3	6
GB2-1/2 4	7 - 46	1
GO-2-93	1 - 1	1
HD-465	9 - 35	1
HM-5601	3 - 17	1
JJ-033	9 - 14	1
JS-5	7 - 39	2
MAZDA 327	9 - 16	1
MS35198-11	8 - 50	6
MS35198-12	4 - 40	2

PART NUMBER	FIG. -INDEX NO.	QTY.
MS35198-13	5 - 7	15
MS35198-23	8 - 46	1
MS35200-1	3 - 3	23
MS35200-11	2 - 10	19
MS35200-12	7 - 45	5
MS35200-13	2 - 15	34
MS35200-14	5 - 8	8
MS35200-16	4 - 51	1
MS35200-2	4 - 35	4
MS35200-23	3 - 18	1
MS35200-25	9 - 9	1
MS35200-27	3 - 11	2
MS35200-3	9 - 50	12
MS35200-42	9 - 48	2
MS35200-6	9 - 51	4
MS35200-8	9 - 60	2
MS35214-11	7 - 34	6
MS35214-12	5 - 11	21
MS35214-13	5 - 7	18
MS35214-14	8 - 9	2
MS35214-24	8 - 46	1
MS35214-7	7 - 74	2
MS35216-1	7 - 35	10
MS35216-10	3 - 12	4
MS35216-11	2 - 6	21
MS35216-12	2 - 2	31
MS35216-13	2 - 3	16
MS35216-14	2 - 11	1
MS35216-15	7 - 32	1
MS35216-16	5 - 9	13
MS35216-2	1 -	2
MS35216-23	3 - 19	3
MS35216-24	4 - 8	4
MS35216-25	4 - 8	4
MS35216-26	2 - 7	9
MS35216-35	9 - 2	1
MS35216-4	9 - 50	4
MS35216-46	9 - 59	2
MS35216-5	7 - 42	2
MS35216-6	7 - 40	2
MS35216-65	2 - 7	2
MS35216-8	7 - 42	1
MS35216-9	8 - 64	2
MT103A-12	3 - 3	12
M38-1000	8 - 30	6
NAS-51-15	7 - 68	4
N219-7	2 - 1	8
RC20GF100K	4 - 16	3
RC20GF102K	8 - 20	1
RC20GF103K	8 - 21	2
RC20GF104K	8 - 23	1
RC20GF105K	6 - 50	1
RC20GF120K	4 - 23	1
RC20GF152K	4 - 18	2
RC20GF181K	8 - 18	1
RC20GF182K	8 - 20	1
RC20GF221K	4 - 17	3
RC20GF222K	4 - 29	3
RC20GF223K	8 - 22	1

	PART NUMBER	FIG. -INDEX NO.	QTY.
	RC20GF272K	4 - 20	5
	RC20GF331K	9 - 82	1
	RC20GF332K	4 - 22	1
	RC20GF333K	8 - 22	2
	RC20GF470K	8 - 17	2
	RC20GF473K	8 - 22	2
	RC20GF562K	4 - 21	1
	RC20GF682K	6 - 49	1
	RC20GF822J	9 - 28	1
	RC32GF100K	3 - 27	1
	RC32GF152K	4 - 28	1
	RC32GF182K	4 - 19	1
	RC32GF332K	3 - 26	1
	RC42GF151K	4 - 27	1
	RC42GF471K	9 - 82	1
	RC42GF474K	3 - 24	1
	RC42GF563J	2 - 18	1
	RC42GF564K	2 - 17	1
	RC42GF684J	9 - 32	1
	RN65B1211F	9 - 25	1
	RN65B1961F	9 - 20	1
	RN65B2873F	9 - 23	1
	RN65B3832F	9 - 22	1
	RN65B90R9F	9 - 26	1
	RN70B10R0F	9 - 30	1
	RW30V201	2 - 9	1
	RW30V251	2 - 8	1
	RW30V500	2 - 7	2
	SFR166K25	8 - 72	1
	SKT-2-BC	8 - 40D	1
	SR166K25	8 - 72	1
	ST-SM-1	8 - 4	10
	ST-1050-34	2 - 12	5
	SV-808	9 - 24	1
	S83642	2 - 4	2
	VC-20G	6 - 17	1
	VC-9G	8 - 58	1
	VCM15E151G	8 - 28	1
	VCM15E470G	8 - 34	1
	VCM15E510G	8 - 27	1
R	X-1980XA-MOD-	3 - 15	6
R	X-42759-MOD-	4 - 35	18
R	X1676A	8 - 50	2
	X7470-C91	8 - 8	2
	X7490-C90	6 - 1	2
	Z-10986	9 - 15	1
	009 3006 00	9 - 7	1
	012 1395 00	1 - 1	1
	012 1504 00	1 - 1	1
	015 0552 00	2 - 7	4
	1N1491	2 - 19	8
	1N1492	3 - 20	4
	1N1695	9 - 82	1
	1N67A	9 - 76	1
	1SM3	7 - 40	2
	10100-24	6 - 46	1
	10100-28	8 - 15	1
	10100-34	8 - 16	2
	10102-32	7 - 5	2
	10102-34	8 - 44	3
	10102-36	8 - 16	2
	10200-28	6 - 47	1
	10205-3	8 - 14	1
	1126	4 - 9	1
	1214-05	8 - 59	1
	139 0648 00	4 - 9	1
	1400 SPECIAL	9 - 12	1
	141 0159 00	8 - 9	1

	PART NUMBER	FIG. -INDEX NO.	QTY.
	148-3-MOD-	8 - 45	1
R	150D476X0035S2	4 - 55	1
	151E44R	6 - 50	2
	151E148	8 - 24	1
	1714-05	4 - 11	4
	1720-02	9 - 14	1
	183 0333 00	2 - 6	1
	183 1209 00	9 - 82	1
	183 1365 00	9 - 82	1
	183 1611 00	3 - 25	1
	184 7010 00	9 - 82	2
	184 7036 00	2 - 20	3
	184 7240 00	4 - 52	2
	184 7243 00	4 - 30	1
	184 7244 00	4 - 53	2
R	184 7411 00	4 - 55	1
	190 0071 00	8 - 50	2
	190 1105 00	8 - 52	1
	2-0-140	1 - 1	1
	2N44	4 - 39	1
	2N45	4 - 39	1
	2X783	8 - 52	1
	20K/14650/P34-2-	8 - 9	1
	200 0268 00	8 - 50	8
R	200 1675 00	2 - 1	8
	21603-A	4 - 6	1
	220 1284 00	8 - 9	1
	220 1291 00	8 - 8	2
	220 1293 00	6 - 1	2
	2225	9 - 68	1
	230 0267 00	7 - 2	1
	230 0273 00	9 - 6	1
	240 0037 00	8 - 14	1
	240 0061 00	8 - 15	1
	240 0064 00	8 - 16	2
	240 0068 00	6 - 46	1
	240 0149 00	7 - 5	2
	240 0150 00	8 - 44	3
	240 0151 00	8 - 16	2
	240 0156 00	6 - 47	1
	240 0614 00	3 - 11	2
	241 0276 00	8 - 34	5
	25A556	9 - 6	1
	2466 W5TO 102P	6 - 43	6
	253 0001 00	5 - 16	2
	253 0002 00	5 - 13	2
	253 0009 00	5 - 14	1
	256 0118 00	8 - 47	1
	259 0873 00	9 - 11	1
	260 0945 00	7 - 39	2
	262 0179 00	9 - 16	1
	266 0043 00	7 - 40	2
	269 1870 00	7 - 109	1
	269 1871 00	7 - 107	1
	269 1872 00	7 - 37	1
	280 2083 00	1 -	1
	28010-2	9 - 62	1
	28078-0	9 - 61	1
	281 0280 00	9 - 12	1
	29F444	9 - 82	2
	29F444G4	4 - 52	2
	29F474	2 - 20	3
	29F475G4	4 - 53	2
	29F489G4	4 - 30	1
	290 8401 00	6 - 19	1
	290 8402 00	6 - 20	1
	290 8403 00	6 - 21	1
	290 8404 00	6 - 22	1

	PART NUMBER	FIG.-INDEX NO.	QTY.
	290 8405 00	6 - 23	1
	290 8406 00	6 - 24	1
	290 8407 00	6 - 25	1
	290 8408 00	6 - 26	1
	290 8409 00	6 - 27	1
	290 8410 00	6 - 28	1
	290 8411 00	6 - 29	1
	290 8412 00	6 - 30	1
	290 8413 00	6 - 31	1
	290 8414 00	6 - 32	1
	290 8415 00	6 - 33	1
	290 8416 00	6 - 34	1
	290 8417 00	6 - 35	1
	290 8418 00	6 - 36	1
	290 8419 00	7 - 8	1
	290 8420 00	7 - 9	1
	290 8421 00	7 - 10	1
	290 8422 00	7 - 11	1
	290 8423 00	7 - 12	1
	290 8424 00	7 - 13	1
	290 8425 00	7 - 14	1
	290 8426 00	7 - 15	1
	290 8427 00	7 - 16	1
	290 8428 00	7 - 17	1
	290 8429 00	7 - 18	1
	290 8430 00	7 - 19	1
	290 8431 00	7 - 20	1
	290 8432 00	7 - 21	1
	290 8433 00	7 - 22	1
	290 8434 00	7 - 23	1
	290 8435 00	7 - 24	1
	290 8436 00	7 - 25	1
	290 8437 00	7 - 26	1
	290 8438 00	7 - 27	1
	30-183-1	5 - 19	1
	3017-6	8 - 46	1
	302 0262 00	7 - 107	2
	302 0348 00	2 - 7	8
	304 0015 00	6 - 1	1
	304 0317 00	2 - 14	7
	304 0318 00	8 - 46	1
	304 0332 00	3 - 13	17
	304 3020 00	8 - 46	1
	304 8000 00	9 - 44	1
	306 0091 00	2 - 12	5
	306 0214 00	3 - 15	6
	306 0234 00	2 - 10	14
	306 0323 00	8 - 40B	3
	306 0324 00	8 - 4	10
R	306 0348 00	3 - 3	12
	306 0721 00	8 - 3	6
R	306 1018 00	4 - 35	18
	309 0074 00	7 - 61	1
	309 0301 00	7 - 46	1
	309 0705 00	8 - 72	1
	309 0706 00	8 - 72	1
	31-04	8 - 6	1
R	310 0044 00	9 - 60	10
	310 0045 00	2 - 3	6
	310 0046 00	3 - 18	2
	310 0049 00	3 - 11	2
	310 0076 00	5 - 8	58
	310 0077 00	8 - 46	2
	310 0080 00	3 - 16	4
	310 0081 00	8 - 6	1
	310 0275 00	1 -	10
	310 0279 00	2 - 2	41
	310 0282 00	3 - 19	23
	310 0395 00	3 - 13	12

	PART NUMBER	FIG.-INDEX NO.	QTY.
	310 0447 00	2 - 7	4
	310 6320 00	7 - 40	6
	311 0079 00	8 - 71	1
	311 0417 00	7 - 55	3
	311 0418 00	7 - 3	1
	312 0075 00	3 - 18	1
	313 0003 00	8 - 59	1
	313 0037 00	9 - 33	3
	313 0043 00	9 - 42	3
	313 0045 00	9 - 1	4
	313 0056 00	9 - 44	2
	313 0132 00	6 - 1	15
	313 0156 00	8 - 7	14
	313 0163 00	6 - 44	5
	313 0188 00	4 - 32	3
	327-000 X5VO 1022	8 - 59	1
	330 2290 00	2 - 13	13
	330 2291 00	4 - 44	4
	333 0347 00	2 - 3	6
	333 0368 00	2 - 5	4
	333 0604 00	7 - 40	7
	333 0605 00	2 - 13	36
	334 0266 00	4 - 11	4
	334 0273 00	6 - 17	1
	334 4030 00	8 - 70	1
	334 4120 00	9 - 14	1
	335 0022 00	5 - 30	4
	335 0069 00	7 - 58	12
	340 0023 00	7 - 68	4
	340 0038 00	7 - 30	1
R	340 0250 00	7 - 61	1
R	340 0252 00	3 - 2	8
	340 0641 00	9 - 2	1
	342 0041 00	9 - 60	2
	342 0043 00	2 - 10	19
	342 0044 00	7 - 45	5
	342 0045 00	2 - 15	34
	342 0046 00	5 - 8	8
	342 0048 00	4 - 51	1
	342 0060 00	3 - 18	1
	342 0062 00	9 - 9	1
	342 0064 00	3 - 11	2
	342 0080 00	9 - 48	2
	342 0131 00	3 - 3	23
	342 0132 00	4 - 35	4
	342 0133 00	9 - 50	12
	342 0136 00	9 - 51	4
	342 0151 00	8 - 50	6
	342 0152 00	4 - 40	2
	342 0153 00	5 - 7	15
	342 0166 00	8 - 46	1
	343 0005 00	7 - 42	1
	343 0016 00	2 - 9	1
	343 0061 00	2 - 7	2
	343 0122 00	7 - 35	10
	343 0123 00	1 -	2
	343 0125 00	9 - 50	4
	343 0126 00	7 - 42	2
	343 0127 00	7 - 40	2
R	343 0129 00	8 - 64	2
	343 0131 00	3 - 12	4
	343 0132 00	2 - 6	21
	343 0133 00	2 - 2	31
	343 0134 00	2 - 3	16
	343 0135 00	2 - 11	1
	343 0136 00	7 - 32	1
	343 0137 00	5 - 9	13
	343 0167 00	3 - 19	3
	343 0168 00	4 - 8	4

	PART NUMBER	FIG.-INDEX NO.	QTY.
	343 0169 00	4 - 8	4
	343 0170 00	2 - 7	9
	343 0182 00	9 - 2	1
	343 0193 00	9 - 59	2
	343 0258 00	8 - 67	1
	343 0284 00	7 - 34	6
	343 0285 00	5 - 11	21
	343 0286 00	5 - 7	18
	343 0287 00	8 - 9	2
	343 0303 00	7 - 74	2
	343 0329 00	8 - 46	1
	343 0382 00	8 - 8	6
	343 0667 00	7 - 35	10
	347 0007 00	4 - 6	8
	347 0010 00	7 - 6	2
	347 0012 00	6 - 4	6
	347 0032 00	7 - 1	1
	347 0034 00	7 - 1	2
	347 0045 00	7 - 116	2
	347 0088 00	9 - 61	8
	347 0089 00	9 - 63	4
	347 0090 00	8 - 40A	4
	352 0002 00	4 - 39	1
	352 0004 00	4 - 39	1
	352 0043 00	3 - 16	5
	352 0044 00	4 - 31	2
	352 0056 00	9 - 35	1
	353 1660 00	2 - 19	8
	353 1661 00	3 - 20	4
	353 1665 00	9 - 82	1
	353 2015 00	9 - 76	1
	353 2595 00	9 - 24	1
	357 9210 00	8 - 55	1
	357 9211 00	9 - 68	1
	357 9257 00	8 - 6	1
	358 1050 00	9 - 14	1
	360 0087 00	8 - 40D	1
	370 2095 00	9 - 53	1
	370 2112 00	9 - 52	1
	371 0020 00	4 - 38	2
	371 0031 00	7 - 33	1
	371 0041 00	9 - 54	3
	371 0042 00	9 - 55	1
	373 0084 00	8 - 55	2
	373 0085 00	9 - 14	1
	373 0090 00	4 - 11	4
	373 0151 00	8 - 59	1
	373 7010 00	8 - 69	2
	373 8010 00	9 - 42	3
	373 8020 00	9 - 41	1
	377 9189 00	8 - 64	1
	377 9191 00	8 - 65	2
	380 1662 00	9 - 37	1
	380 1665 00	9 - 39	1
	380 1667 00	4 - 10	1
	3950	8 - 55	1
	4007-4	6 - 1	1
	4040	3 - 13	17
	410 0154 00	9 - 64	1
	426 1833 00	5 - 19	1
	43A171	7 - 2	1
	458 0415 00	9 - 15	1
R	500 1099 003	3 - 2	5
	502 1810 001	9 - 57	2
	503 4970 001	9 - 1	2
	504 0744 003	7 - 6	2
	506 5902 003	8 - 50	12
	506 5907 003	2 - 13	24
	506 6946 002	6 - 18	2

	PART NUMBER	FIG.-INDEX NO.	QTY.
	5100-25	7 - 30	1
R	5133-12-C	7 - 61	1
R	5133-15-C	3 - 2	8
	522 0835 004	1 - 2	1
	522 0886 005	1 - 2	1
	522 0899 004	1 -	REF
	540 3005 003	7 - 30	1
R	540 3040 00	7 - 52A	1
	540 8238 002	6 - 6	9
	540 9037 003	2 - 6	3
	541 1242 003	4 - 32	3
	541 1244 003	4 - 32	6
	541 1246 003	4 - 32	3
	541 5180 002	9 - 56	4
	541 5187 002	7 - 32	1
	541 5975 002	6 - 4	8
	541 5977 002	6 - 4	8
	541 5979 002	7 - 37	2
	541 5981 002	7 - 110	2
	541 6017 002	7 - 44	2
	541 6021 002	4 - 51	1
	541 6550 003	5 - 15	2
	541 6553 003	5 - 12	3
	541 7455 002	9 - 47	2
	542 1588 003	7 - 46	3
	542 1600 003	7 - 112	9
	542 1601 003	8 - 55	1
	542 1602 003	7 - 70	1
	542 1604 003	7 - 30	1
	542 3209 002	9 - 4	1
	542 4501 002	7 - 54	1
	542 4509 002	7 - 55	2
	542 4510 002	7 - 93	2
	542 4513 002	7 - 58	6
	542 4524 002	7 - 52	2
	542 4525 002	7 - 50	4
	542 4528 002	5 - 32	2
	542 4530 002	5 - 33	1
	542 4560 002	7 - 88	2
	542 4595 002	7 - 75	2
	542 4598 002	7 - 76	2
	542 4599 002	7 - 83	1
	542 4723 003	7 - 93	1
	542 5255 002	5 - 10	4
	542 5312 002	9 - 44	1
	542 5313 002	9 - 44	1
	542 5338 005	1 - 3	1
	542 5729 003	7 - 116	1
	542 6286 004	1 - 4	1
	542 6505 002	9 - 48	1
	542 6506 002	9 - 82	4
	542 6508 002	9 - 67	1
	542 6509 002	9 - 66	1
	542 6510 002	9 - 74	1
	542 6511 002	9 - 70	1
	542 6512 002	9 - 80	1
	542 6515 002	9 - 8	1
	542 6518 002	9 - 2	2
	542 6519 002	9 - 33	1
	542 6521 002	6 - 13	18
	542 6523 002	7 - 31	1
	542 6524 002	7 - 31	4
	542 6527 002	7 - 80	1
	542 6528 002	7 - 79	1
	542 6529 002	7 - 82	1
	542 6530 002	6 - 9	3
	542 6531 002	6 - 38	1
	542 6545 002	6 - 9	6
	542 6546 002	7 - 43	1

PART NUMBER	FIG. -INDEX NO.	QTY.
542 6547 002	7 - 117	2
542 6548 002	7 - 118	2
542 6549 002	7 - 95	2
542 6550 002	7 - 95	2
542 6551 002	8 - 62	3
542 6553 00	7 - 3	1
542 6554 002	7 - 90	1
542 6555 002	7 - 91	1
542 6556 002	7 - 101	1
542 6557 002	7 - 103	1
542 6558 002	7 - 115	1
542 6559 002	7 - 114	1
542 6560 002	7 - 111	1
542 6561 002	5 - 5	2
542 6562 002	7 - 65	1
542 6563 002	7 - 66	1
542 6564 002	7 - 70	1
542 6565 002	7 - 67	1
542 6568 002	7 - 69	1
542 6569 002	7 - 70	2
542 6575 002	7 - 63	1
542 6581 002	7 - 94	1
542 6583 002	7 - 60	1
542 6584 002	7 - 45	1
542 6585 002	7 - 46	1
542 6587 002	7 - 98	1
542 6588 002	7 - 53	1
542 6589 002	7 - 100	1
542 6590 002	7 - 105	1
542 6593 002	5 - 8	1
542 6595 00	8 - 72	1
542 6597 002	6 - 4	4
542 6598 002	6 - 18	2
542 6599 002	5 - 23	8
542 6600 002	8 - 50	3
542 6610 002	8 - 42	1
542 6611 002	8 - 42	2
542 6612 002	8 - 42	1
542 6613 002	8 - 63	2
542 6617 002	5 - 34	1
542 6618 002	8 - 69	2
542 6620 002	8 - 55	1
542 6623 002	7 - 6	1
542 6624 002	5 - 29	2
542 6625 00	8 - 64	1
542 6626 002	8 - 16	3
542 6627 002	8 - 33	2
542 6628 002	8 - 33	1
542 6629 002	8 - 68	1
542 6631 002	6 - 50	1
542 6632 002	6 - 9	3
542 6633 002	6 - 8	3
542 6634 002	7 - 1	1
542 6635 002	7 - 89	1
542 6636 002	7 - 84	1
542 6637 002	7 - 113	1
542 6638 002	5 - 4	1
542 6639 002	7 - 68	2
542 6640 002	7 - 71	1
542 6641 002	7 - 62	1
542 6642 002	7 - 56	1
542 6643 002	7 - 57	1
542 6644 002	7 - 59	1
542 6645 002	7 - 46	1
542 6646 002	7 - 51	1
542 6647 002	7 - 47	1
542 6648 002	7 - 96	1
542 6649 002	5 - 6	1
542 6650 002	7 - 73	2

PART NUMBER	FIG. -INDEX NO.	QTY.
542 6651 002	7 - 95	1
542 6652 002	7 - 48	2
542 6653 002	8 - 53	1
542 6654 002	8 - 48	1
542 6655 002	8 - 63	1
542 6656 002	8 - 71	1
542 6657 002	8 - 72	1
542 6658 002	8 - 70	1
542 6663 002	7 - 81	1
542 6664 002	7 - 77	1
542 6665 002	7 - 78	1
542 6666 002	8 - 2	1
542 6667 002	8 - 11	1
542 6668 002	6 - 51	1
542 6669 002	5 - 7	1
542 6670 002	7 - 29	2
542 6671 002	5 - 31	2
542 6672 002	6 - 14	18
542 6675 002	4 - 44	1
542 6676 002	3 - 12	1
542 6677 002	4 - 51	1
542 6679 002	4 - 5	1
542 6682 002	3 - 16	4
542 6683 002	4 - 33	1
542 6688 002	2 - 6	2
542 6692 002	2 - 5	3
542 6694 002	3 - 18	1
R 542 6697 003	5 - 3	3
542 6703 003	3 - 1	1
542 6704 003	2 - 1	2
542 6706 003	9 - 10	1
542 6717 003	7 - 31	2
542 6719 003	5 - 9	1
542 6724 003	7 - 97	1
542 6726 003	8 - 13	1
542 6728 003	7 - 64	1
542 6730 003	7 - 38	1
542 6733 003	8 - 61	1
542 6734 003	7 - 93	1
542 6735 003	7 - 72	1
542 6736 003	8 - 40A	1
542 6737 003	6 - 18	1
542 6738 003	6 - 10	1
542 6739 003	6 - 4	1
542 6740 003	7 - 7	1
542 6743 003	4 - 56	1
542 6744 002	3 - 5	1
542 6746 003	4 - 14	1
542 6747 003	3 - 14	4
542 6748 003	4 - 12	1
542 6751 003	2 - 15	1
542 6753 003	2 - 21	1
542 6756 004	9 - 81	1
542 6757 004	9 - 5	1
542 6758 004	9 - 59	1
542 6760 004	6 - 39	1
542 6762 004	6 - 15	1
542 6764 004	6 - 7	1
542 6766 004	7 - 28	2
542 6771 004	8 - 73	1
542 6774 004	5 - 11	1
542 6775 004	8 - 5	1
542 6776 004	8 - 41	1
542 6777 004	5 - 35	1
542 6778 004	5 - 17	1
542 6782 004	4 - 41	1
542 6784 004	3 - 4	1
542 6785 005	1 - 1	1
542 6786 005	8 - 40E	1

	PART NUMBER	FIG. -INDEX NO.	QTY.
	542 6788 005	7 - 119	1
	542 6789 005	8 - 1	1
	542 6790 006	5 - 18	1
	542 6791 00	9 - 51	1
	542 6792 00	8 - 39	1
	542 6793 00	7 - 32	1
	542 6794 00	4 - 37	1
	542 6795 00	2 - 13	1
	542 6796 00	3 - 10	1
	542 6797 002	8 - 54	1
	542 6798 002	5 - 28	1
	542 6799 002	8 - 60	1
	542 6806 002	9 - 50	4
	542 6807 002	9 - 3	1
	542 6817 002	9 - 46	1
	542 6818 002	9 - 2	1
	542 6819 003	9 - 83	1
	542 6820 003	9 - 49	1
	542 6821 003	1 - 1	1
	542 6822 003	7 - 93	1
	542 6833 005	1 - 5	1
	542 6834 002	8 - 51	1
	542 7354 002	5 - 24	4
	542 7356 002	5 - 25	1
	542 7358 002	9 - 50	1
	542 7481 003	4 - 35	4
	543 4611 002	4 - 34	1
	543 4908 002	3 - 8	1
	543 4979 002	9 - 45	1
	543 5197 002	9 - 9	1
	543 5203 00	9 - 19	1
	543 5204 002	9 - 36	1
	543 5205 003	9 - 18	1
	543 5206 003	9 - 17	1
	543 7996 002	8 - 49	1
	544 5026 002	4 - 49	1
	545 7123 00	7 - 4	1
	546 2213 002	7 - 49	4
R	546 2215 002	7 - 93	1
R	546 8183 003	4 - 1	1
R	546 8185 003	5 - 2	1
R	546 8186 003	5 - 1	1
R	546 8187 003	4 - 2	1
R	546 8188 003	4 - 3	1
R	546 8190 003	3 - 2	3
R	546 9033 002	2 - 1	3
	5654	5 - 16	2
	5670	5 - 13	2
	5686	5 - 14	1
	664 1003 00	3 - 19	1
	667 0260 00	4 - 6	1
	672 1098 00	2 - 3	1
	677 1047 00	4 - 8	1
	677 1048 00	4 - 7	1
	678 1096 00	2 - 2	1
	678 1113 00	9 - 34	1
	68-1660-26	7 - 40	7
	68-1660-40	2 - 13	36
	68NM-40	2 - 3	6
	68NM-62	2 - 5	4
	6884	8 - 47	1
	705 7046 00	9 - 26	1
	705 7100 00	9 - 25	1
	705 7110 00	9 - 20	1
	705 7172 00	9 - 22	1
	705 7214 00	9 - 23	1
	705 7500 00	9 - 30	1
	714 1562 00	4 - 15	1
	7255	3 - 11	2

	PART NUMBER	FIG. -INDEX NO.	QTY.
	7276207	3 - 16	5
	745 1268 00	4 - 16	3
	745 1272 00	4 - 23	1
	745 1296 00	8 - 17	2
	745 1321 00	8 - 18	1
	745 1324 00	4 - 17	3
	745 1331 00	9 - 82	1
	745 1352 00	8 - 20	1
	745 1359 00	4 - 18	2
	745 1363 00	8 - 20	1
	745 1366 00	4 - 29	3
	745 1370 00	4 - 20	5
	745 1373 00	4 - 22	1
	745 1384 00	4 - 21	1
	745 1387 00	6 - 49	1
	745 1390 00	9 - 28	1
	745 1394 00	8 - 21	2
	745 1408 00	8 - 22	1
	745 1415 00	8 - 22	2
	745 1422 00	8 - 22	2
	745 1436 00	8 - 23	1
	745 1478 00	6 - 50	1
	745 3268 00	3 - 27	1
	745 3359 00	4 - 28	1
	745 3363 00	4 - 19	1
	745 3373 00	3 - 26	1
	745 5617 00	4 - 27	1
	745 5638 00	9 - 82	1
	745 5725 00	2 - 18	1
	745 5764 00	3 - 24	1
	745 5768 00	2 - 17	1
	745 5770 00	9 - 32	1
	745 9645 00	3 - 17	1
	747 0225 00	2 - 7	2
	747 0237 00	2 - 9	1
	747 0239 00	2 - 8	1
R	747 5310 00	8 - 34A	1
	747 5322 00	9 - 27	1
	747 5323 00	9 - 21	1
	747 9433 00	9 - 31	1
	747 9608 00	8 - 24	1
	747 9613 00	6 - 50	2
	747 9623 00	4 - 26	1
	747 9647 00	3 - 23	2
	747 9660 00	3 - 22	1
	747 9662 00	8 - 25	1
R	747 9663 00	4 - 25	1
	747 9664 00	8 - 23	1
	747 9668 00	2 - 16	2
	82000-LK	7 - 107	1
	8942	7 - 107	2
	912 0469 00	8 - 34	1
	912 0472 00	8 - 27	1
	912 0505 00	8 - 28	1
	912 0668 00	8 - 29	9
	912 0938 00	8 - 30	6
	912 2816 00	6 - 2	1
	913 0223 00	6 - 45	1
	913 1186 00	6 - 5	6
	913 1187 00	8 - 32	1
	913 1188 00	9 - 43	1
	913 1292 00	8 - 59	1
	913 3208 00	6 - 43	6
	913 3741 00	8 - 46	1
	916 0071 00	6 - 3	1
	916 0076 00	6 - 50	1
	916 0126 00	9 - 72	1
	916 0130 00	9 - 71	1
	916 0134 00	9 - 73	2

	PART NUMBER	FIG. -INDEX NO.	QTY.
	916 0141 00	8 - 56	1
	916 0210 00	8 - 33	1
	916 4188 00	8 - 38	1
	921 0005 00	8 - 10	1
	922 0390 00	8 - 58	1
	922 0414 00	6 - 17	1
	922 0454 00	8 - 45	1
R	922 0605 00	8 - 43	1

PART NUMBER	FIG. -INDEX NO.	QTY.
928 4331 00	9 - 69	2
951 3999 00	2 - 4	2
96-0177-00	9 - 34	1
96212-A2	9 - 11	1
972 1334 00	9 - 61	1
972 1335 00	9 - 62	1
972 1459 00	9 - 65	1
974 0567 00	7 - 36	1

SYMBOL LIST INDEX

SYMBOL	PART NUMBER	FIGURE & INDEX NO.
B1	542 6634 002	7-1
B1	230 0273 00	9-6
C1A,B	183 0333 00	2-6
C1, C2	184 7036 00	3-21
C1	184 7244 00	4-53
C1	913 0223 00	6-45
C1	916 0134 00	9-73
C2	951 3999 00	2-4
C2	184 7240 00	4-52
C2	912 2816 00	6-2
C2	916 0126 00	9-72
C3	184 7036 00	2-20
C3	183 1611 00	3-25
C3	184 7411 00	4-55
C3	922 0414 00	6-17
C3, C4	928 4331 00	9-69
C4	951 3999 00	3-6
C4	184 7240 00	4-52
C4	916 0076 00	6-50
C5	184 7244 00	4-53
C5	913 1186 00	6-11
C5	916 0130 00	9-71
C6	184 7243 00	4-30
C6	913 1186 00	6-5
C6	916 0134 00	9-73
C7	916 0071 00	6-3
C7	183 1209 00	9-82
C8, C9	913 3208 00	6-43
C8	183 1365 00	9-82
C9	913 3208 00	9-78
C10	913 1186 00	6-11
C10	913 1188 00	9-43
C11	913 1186 00	8-31
C12	916 0210 00	8-33
C12, C13	184 7010 00	9-82
C14	913 1187 00	8-32
C15	912 0505 00	8-28
C16	912 0472 00	8-27
C17	913 1186 00	8-31
C18	912 0668 00	8-29
C22	912 0938 00	8-30
C23, C24	912 0668 00	8-29
C28	912 0938 00	8-30
C29, C30	912 0668 00	8-29
C33	912 0668 00	8-29
C34	912 0938 00	8-30
C35	912 0668 00	8-29
C36	916 4188 00	8-38
C37	916 0141 00	8-56
C38	922 0390 00	8-58
C39	913 1186 00	8-57
C41	913 1292 00	8-59
C42	913 3208 00	8-32
C43	913 3741 00	8-46
C44	922 0605 00	8-43
C45	922 0454 00	8-45
C46	912 0938 00	8-30
C48	912 0668 00	8-29
C50	912 0668 00	8-29
C52, C53	912 0938 00	8-30
C54, C55	913 3208 00	8-32
C56	912 0469 00	8-34
CR1 THRU CR8	353 1660 00	2-19

SYMBOL	PART NUMBER	FIGURE & INDEX NO.
CR1 THRU CR4	353 1661 00	3-20
CR1	353 2015 00	9-76
CR2	353 1665 00	9-82
CR3	353 2595 00	9-24
DS1	262 0179 00	9-16
FL1 THRU FL5	241 0276 00	8-34
J1	371 0041 00	9-54
J2	371 0042 00	9-55
J3, J4	371 0041 00	9-54
J4	357 9257 00	8-6
J5	358 1050 00	9-14
J6	357 9211 00	9-68
K1	974 0567 00	7-36
K1	972 1459 00	9-65
K2	972 1335 00	9-62
K3	410 0154 00	9-64
K4	972 1334 00	9-61
L1	678 1096 00	2-2
L1, L2	240 0614 00	3-11
L1	542 6510 002	9-74
L2	542 6511 002	9-70
L3	542 6512 002	9-80
L4	240 0151 00	9-77
L7	678 1113 00	9-34
L20	240 0068 00	6-46
L21	542 6631 002	6-50
L22	542 6739 003	6-4
L23	240 0156 00	6-47
L24	240 0037 00	8-14
L25	240 0151 00	8-16
L26, L27	240 0064 00	8-16
L28	542 6626 002	8-16
L29	542 6627 002	8-33
L30	542 6626 002	8-16
L31	542 6627 002	8-33
L32	542 6626 002	8-16
L33	542 6628 002	8-33
L34	542 6799 002	8-60
L35	240 0061 00	8-15
L36	240 0150 00	8-44
L37	542 6797 002	8-54
L38	542 6798 002	5-28
L39, L40	240 0150 00	8-44
M1	458 0415 00	9-15
P1	371 0020 00	4-38
P1	357 9210 00	8-55
P1	370 2095 00	9-53
P2	371 0020 00	8-40
P2	370 2112 00	9-52
Q1, Q2	352 0043 00	3-16
Q1	352 0044 00	4-31
Q1	352 0056 00	9-35
Q2	352 0002 00	4-39
Q2	352 0004 00	4-39
Q2	352 0043 00	9-44
Q3	352 0044 00	4-31
Q4, Q5	352 0043 00	4-48
R1	747 0237 00	2-9
R1	745 3373 00	3-26
R1	745 1272 00	4-23
R1, R2	745 1328 00	6-48
R1	380 1665 00	9-39
R2	747 0239 00	2-8

Collins

ILLUSTRATED PARTS CATALOG

SYMBOL	PART NUMBER	FIGURE & INDEX NO.
R2	747 9660 00	3-22
R2	745 5617 00	4-27
R2	377 9191 00	9-60
R3	745 5768 00	2-17
R3	745 9645 00	3-17
R3	745 1359 00	4-18
R3	745 1387 00	6-49
R4	745 5725 00	2-18
R4	745 3268 00	3-27
R4	380 1667 00	4-10
R4	745 1478 00	6-50
R4	745 5638 00	9-82
R5	747 0225 00	2-7
R5	747 9647 00	3-23
R5	745 1370 00	4-20
R5, R6	747 9613 00	6-50
R5	705 7046 00	9-26
R6, R7	747 9668 00	2-16
R6	745 5764 00	3-24
R6	745 1373 00	4-22
R6	705 7172 00	9-22
R7	745 3363 00	4-19
R7	745 1394 00	8-21
R7	705 7214 00	9-23
R8	745 1324 00	4-17
R8	745 1296 00	8-17
R8	745 5770 00	9-32
R9	745 1370 00	4-20
R9	745 1436 00	8-23
R9	745 1390 00	9-28
R10	745 1384 00	4-21
R10	745 1366 00	8-21
R10	705 7100 00	9-25
R11	747 9647 00	4-24
R11	745 1422 00	8-22
R11	705 7500 00	9-30
R12	745 1366 00	4-29
R12	745 1408 00	8-22
R12	747 9433 00	9-31
R13	747 9623 00	4-26
R13	745 1363 00	8-20
R13	705 7110 00	9-20
R14	745 1324 00	4-54
R14	745 1366 00	8-21
R14	745 1359 00	9-75
R15	745 1370 00	4-20
R15	747 9664 00	8-23
R16	745 1268 00	4-16
R16	747 5310 00	8-34A
R16	745 1394 00	9-79
R17	747 9663 00	4-25
R17	745 1321 00	8-18
R17	380 1662 00	9-37
R18	745 3359 00	4-28
R18	745 1415 00	8-22
R19	745 1370 00	8-21
R19	747 5323 00	9-21
R20	745 1324 00	8-19
R20	747 5322 00	9-27
R21	745 1415 00	8-22
R21	745 1331 00	9-82
R22	745 1370 00	8-21
R22	747 0225 00	9-40
R23	745 1352 00	8-20
R23	745 1296 00	9-29
R24	377 9191 00	8-65
R25	377 9189 00	8-64
R26	747 9608 00	8-24

SYMBOL	PART NUMBER	FIGURE & INDEX NO.
R27	747 9662 00	8-25
R28	745 1422 00	8-22
RT1	714 1562 00	4-15
S1A	269 1870 00	7-109
S1A	259 0873 00	9-11
S1B	269 1871 00	7-107
S1C	542 6738 003	6-10
S1D	542 6737 003	6-18
S2A	269 1872 00	7-37
S2B,S2C	542 6766 004	7-28
S3	266 0043 00	7-42
S4	266 0043 00	7-40
T1	672 1098 00	2-3
T1	664 1003 00	3-19
T1	667 0260 00	4-6
T2	677 1048 00	4-7
T3	677 1047 00	4-8
TB1	542 6746 003	4-14
TB1	542 6623 002	7-6
TB1	543 5206 003	9-17
V1,V2	253 0002 00	5-13
V3, V4	253 0001 00	5-16
V5	253 0009 00	5-14
V6	256 0118 00	8-47
XVI	220 1293 00	6-1
XV2	220 1293 00	8-7
XV3, XV4	220 1291 00	8-8
XV5	220 1284 00	8-9
XV6	542 6733 003	8-61
Y1	290 8401 00	6-19
Y2	290 8402 00	6-20
Y3	290 8403 00	6-21
Y4	290 8404 00	6-22
Y5	290 8405 00	6-23
Y6	290 8406 00	6-24
Y7	290 8407 00	6-25
Y8	290 8408 00	6-26
Y9	290 8409 00	6-27
Y10	290 8410 00	6-28
Y11	290 8411 00	6-29
Y12	290 8412 00	6-30
Y13	290 8413 00	6-31
Y14	290 8414 00	6-32
Y15	290 8415 00	6-33
Y16	290 8416 00	6-34
Y17	290 8417 00	6-35
Y18	290 8418 00	6-36
Y19	290 8419 00	7-8
Y20	290 8420 00	7-9
Y21	290 8421 00	7-10
Y22	290 8422 00	7-11
Y23	290 8423 00	7-12
Y24	290 8424 00	7-13
Y25	290 8425 00	7-14
Y26	290 8426 00	7-15
Y27	290 8427 00	7-16
Y28	290 8428 00	7-17
Y29	290 8429 00	7-18
Y30	290 8430 00	7-19
Y31	290 8431 00	7-20
Y32	290 8432 00	7-21
Y33	290 8433 00	7-22
Y34	290 8434 00	7-23
Y35	290 8435 00	7-24
Y36	290 8436 00	7-25
Y37	290 8437 00	7-26
Y38	290 8438 00	7-27

SECTION IV
GROUP ASSEMBLY PARTS LIST

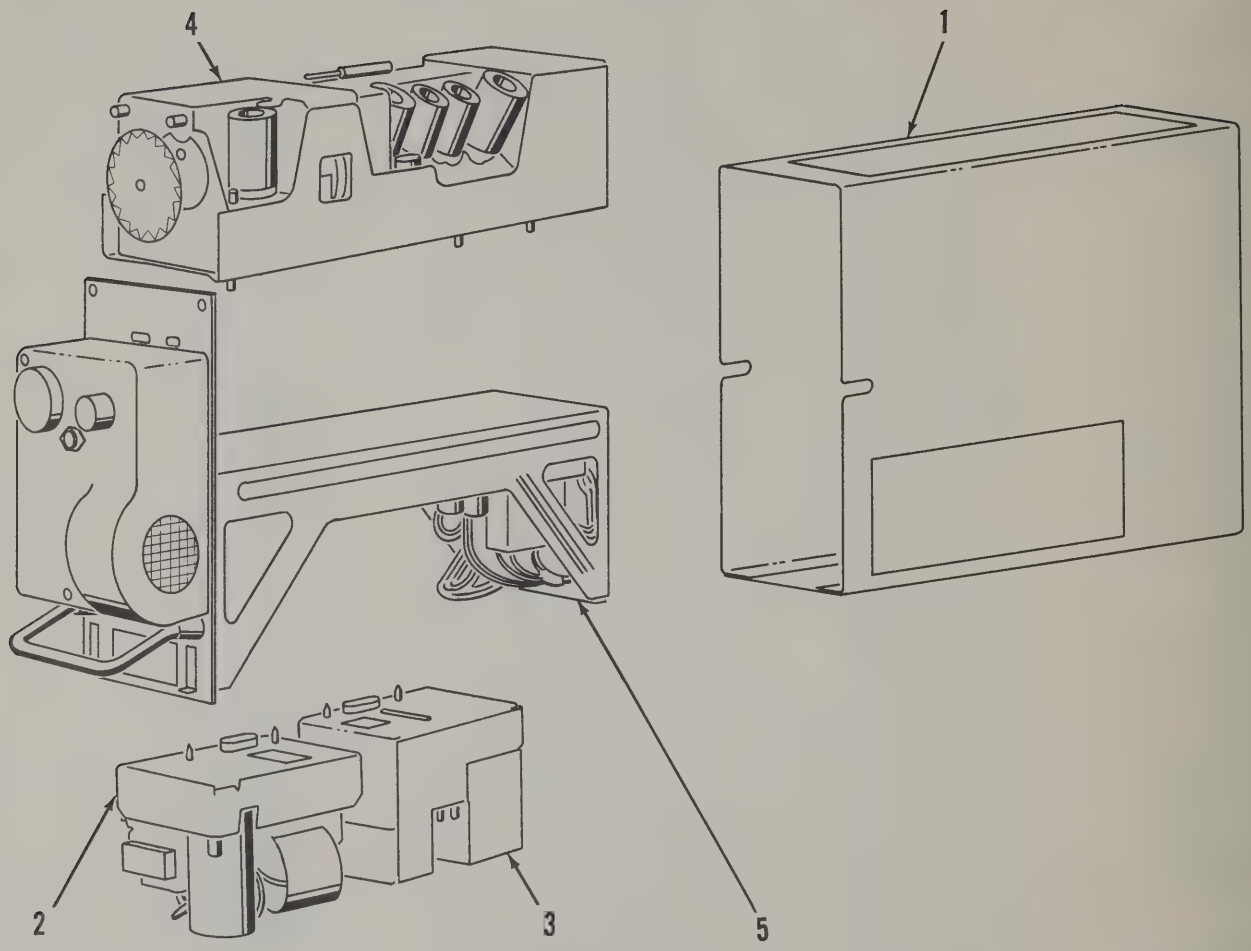

Transmitter 17L-7
Figure 1

FIG. & INDEX NO.	PART NO.	NOMENCLATURE 1 2 3 4 5 6 7	USAGE CODE	UNITS PER ASSY.
1-	522 0899 004	TRANSMITTER 17L-7		REF
	280 2083 00	. NAMEPLATE		1
		-ATTACHING PARTS-		
	MS35216-2	. SCREW, MACHINE V96906 -343 0123 00-		2
	310 0275 00	. WASHER, LOCK		2
		. . . . *		
- 1	542 6821 003	. CASE, 3/8 ATR, SHORT, PRESSED		1
	542 6785 005	. . CASE, 3/8 ATR, SHORT		1
	G0-2-93	. . GROMMET, FASTENER V75618 -012 1395 00-		1
	2-0-140	. . STUD, FASTENER V75618 -012 1504 00-		1
- 2	522 0835 004	. AC POWER SUPPLY 516C-1 -SEE FIGURE 2-		1
	OR			
	522 0886 005	. DC POWER SUPPLY 516D-1 -SEE FIGURE 3-		1
- 3	542 5338 005	. MODULATOR MODULE -SEE FIGURE 4-		1
- 4	542 6286 004	. RF MODULE -SEE FIGURE 5-		1
- 5	542 6833 005	. CHASSIS ASSEMBLY, WIRED -SEE FIGURE 9-		1

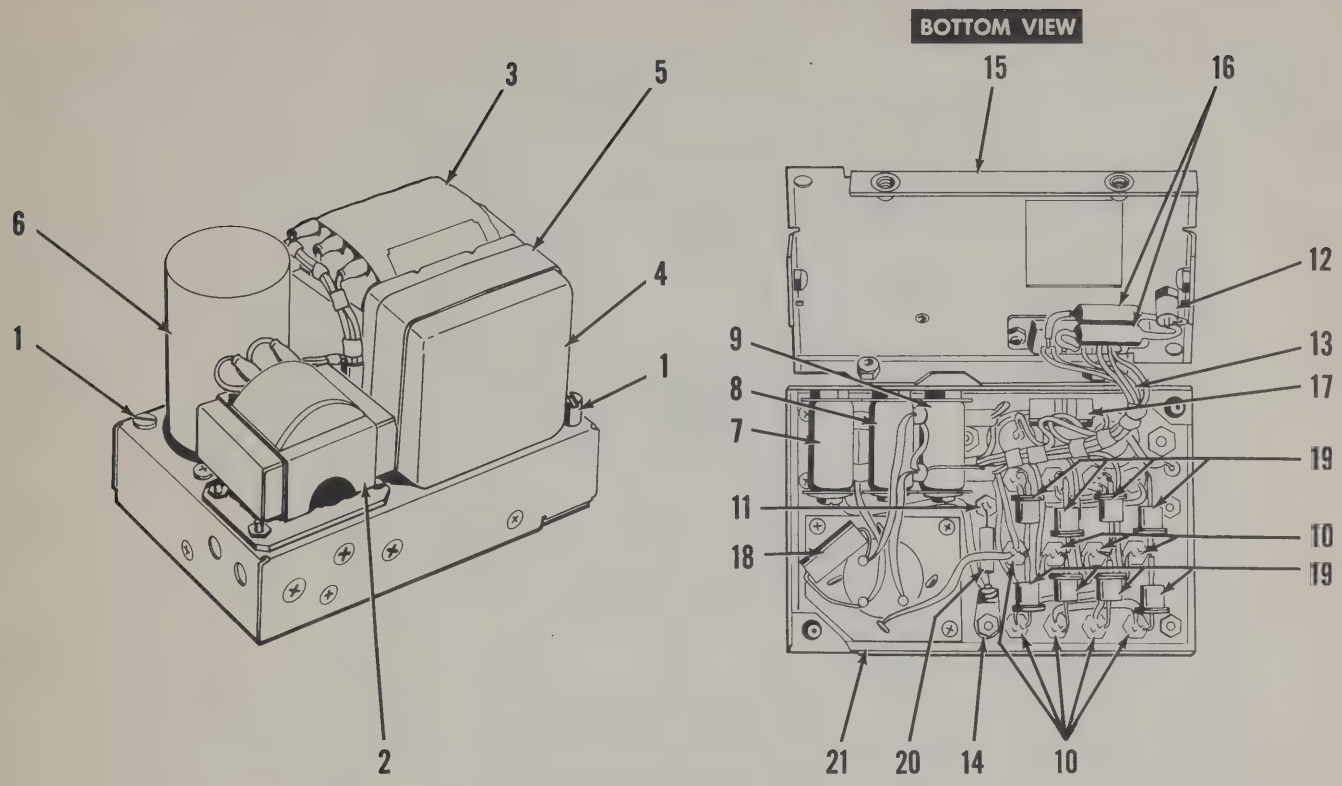

AC Power Supply 516C-1
Figure 2

	FIG. & INDEX NO.	PART NO.	NOMENCLATURE 1 2 3 4 5 6 7	USAGE CODE	UNITS PER ASSY.
	2-	522 0835 004	AC POWER SUPPLY 516C-1 -SEE FIG 1 NHA		REF
			-ATTACHING PARTS-		
	- 1	542 6704 003	SCREW, CAPTIVE		2
R		N219-7	GASKET V02697 -200 1675 00-		5
R		546 9033 002	WASHER		3
			. . . . *		
	- 2	E9931	. REACTOR, FILTER V80008 -678 1096 00- L1		1
			-ATTACHING PARTS-		
		MS35216-12	. SCREW, MACHINE V96906 -343 0133 00-		4
		310 0279 00	. WASHER, LOCK		4
			. . . . *		
	- 3	E9930	. TRANSFORMER, POWER V80008 -672 1098 00- T1		1
			-ATTACHING PARTS-		
		MS35216-13	. SCREW, MACHINE V96906 -343 0134 00-		4
		310 0045 00	. WASHER, FLAT		4
		68NM-40	. NUT, SELFLOCKING V72962 -333 0347 00-		4
			. . . . *		
	- 4	S83642	. CAPACITOR, FIXED, 4 UF V56289 -951 3999 00- C2		1
	- 5	542 6692 002	. STRAP, CAPACITOR		1
			-ATTACHING PARTS-		
		68NM-62	. NUT, SELFLOCKING V72962 -333 0368 00-		2
			. . . . *		
	- 6	D26909	. CAPACITOR, FIXED, 30 UF V56289 -183 0333 00- C1A, B		1
			-ATTACHING PARTS-		
		MS35216-12	. SCREW, MACHINE V96906 -343 0133 00-		3
		542 6688 002	. INSULATOR, CAPACITOR, MOUNTING		2
		540 9037 003	. POST, CAPACITOR, MOUNTING		3
		310 0279 00	. WASHER, LOCK		3
		MS35216-11	. SCREW, MACHINE V96906 -343 0132 00-		3
			. . . . *		

FIG. & INDEX NO.	PART NO.	NOMENCLATURE 1 2 3 4 5 6 7	USAGE CODE	UNITS PER ASSY.
2-				
- 7	RW30V500	. RESISTOR, FIXED, 50 OHMS V81349 -747 0225 00- R5		1
		-ATTACHING PARTS-		
	MS35216-26	. SCREW, MACHINE V96906 -343 0170 00-		1
	MS35216-65	. SCREW, MACHINE V96906 -343 0061 00-		1
	310 0447 00	. WASHER, FLAT		1
	302 0348 00	. WASHER, MICA		2
	015 0552 00	. POST, MOUNTING		1
		. . . . *		
- 8	RW30V251	. RESISTOR, FIXED, 250 OHMS V81349 -747 0239 00- R2		1
		-ATTACHING PARTS-		
	MS35216-26	. SCREW, MACHINE V96906 -343 0170 00-		1
	MS35216-65	. SCREW, MACHINE V96906 -343 0061 00-		1
	310 0447 00	. WASHER, FLAT		1
	302 0348 00	. WASHER, MICA		2
	015 0552 00	. POST, MOUNTING		1
		. . . . *		
- 9	RW30V201	. RESISTOR, FIXED, 2000 OHMS V81349 -747 0237 00- R1		1
		-ATTACHING PARTS-		
	MS35216-26	. SCREW, MACHINE V96906 -343 0170 00-		1
	343 0016 00	. SCREW, MACHINE		1
	310 0447 00	. WASHER, FLAT		1
	302 0348 00	. WASHER, MICA		2
	015 0552 00	. POST, MOUNTING		1
		. . . . *		
- 10	306 0234 00	. TERMINAL, INSULATED E1 THRU 12		12
		-ATTACHING PARTS-		
	MS35200-11	. SCREW, MACHINE V96906 -342 0043 00-		12
		. . . . *		
- 11	306 0234 00	. TERMINAL, INSULATED		1
		-ATTACHING PARTS-		
	MS35216-14	. SCREW, MACHINE V96906 -343 0135 00-		1
	310 0045 00	. WASHER, FLAT		1
	68NM-40	. NUT, SELFLOCKING V72962 -333 0347 00-		1
		. . . . *		
- 12	ST-1050-34	. TERMINAL, INSULATED V16688 -306 0091 00- E14		1
		-ATTACHING PARTS-		
	MS35200-11	. SCREW, MACHINE V96906 -342 0043 00-		1
		. . . . *		
- 13	542 6795 00	. CABLE, AC POWER SUPPLY		1
		-ATTACHING PARTS-		
	330 2290 00	. SCREW, MACHINE		2
	506 5907 003	. WASHER		2
	68-1660-40	. NUT, SELFLOCKING V72962 -333 0605 00-		2
		. . . . *		
- 14	304 0317 00	. LUG, SOLDER E13		1
- 15	542 6751 003	. BASE, RIVETED		1
		-ATTACHING PARTS-		
	MS35200-13	. SCREW, MACHINE V96906 -342 0045 00-		6
		. . . . *		
- 16	747 9668 00	. RESISTOR, FIXED, 0.15 OHMS R6,R7		2
- 17	RC42GF564K	. RESISTOR, FIXED, 560,000 OHMS V81349 -745 5768 00- R3		1
- 18	RC42GF563J	. RESISTOR, FIXED, 56,000 OHMS V81349 -745 5725 00- R4		1
- 19	1N1491	. RECTIFIER V24446 -353 1660 00- CR1 THRU CR8		8
- 20	29F474	. CAPACITOR, FIXED, 18 UF V24446 -184 7036 00- C3		1
- 21	542 6753 003	. CHASSIS, PRESSED		1

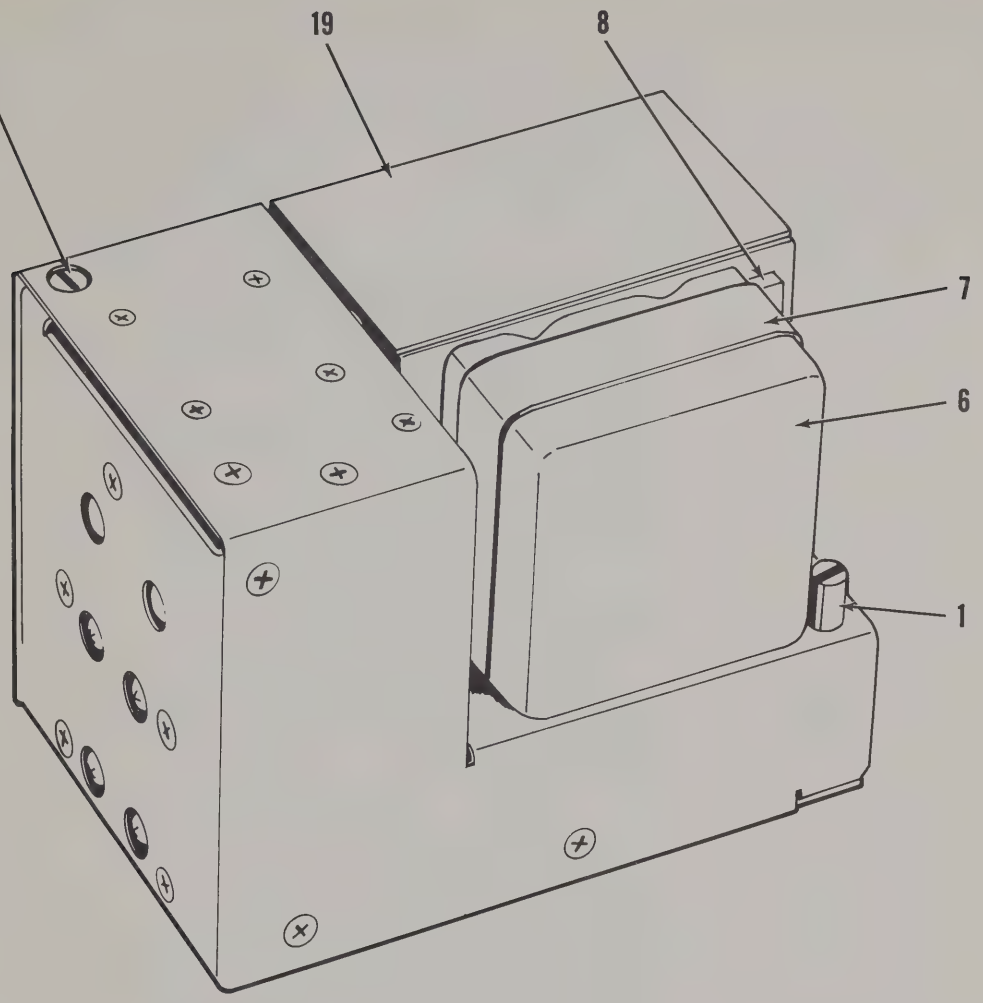
2
19
8
7
6
1

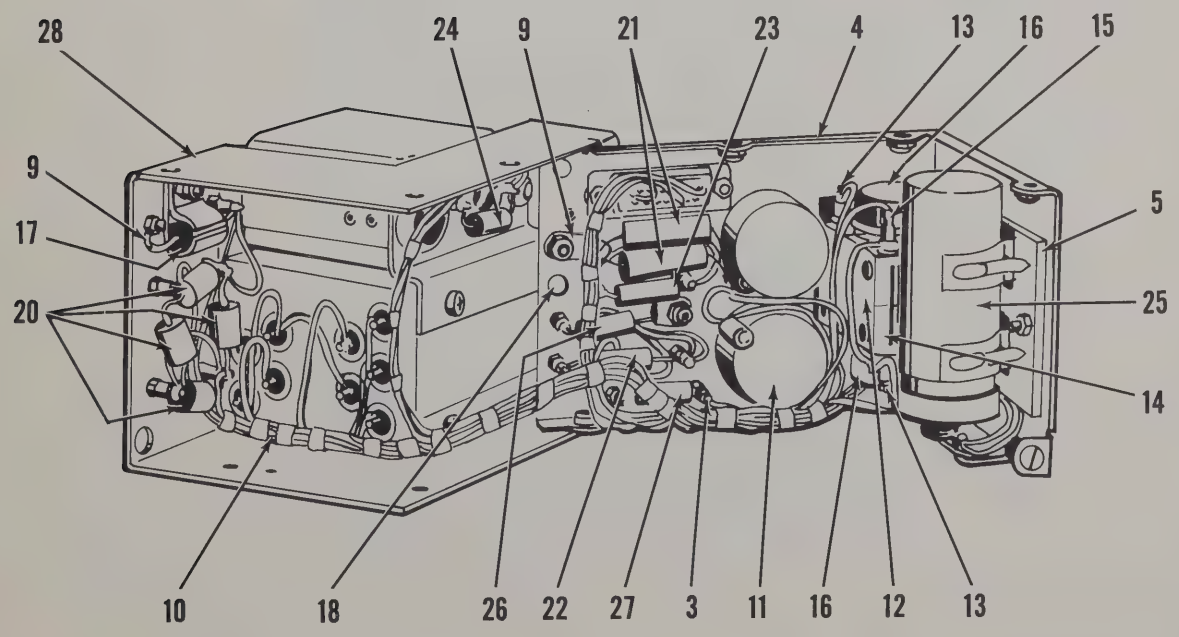
28
24
9
21
23
4
13
16
15
9
17
20
5
25
14
10
18
26
22
27
3
11
16
12
13

FIG. & INDEX NO.	PART NO.	NOMENCLATURE 1 2 3 4 5 6 7	USAGE CODE	UNITS PER ASSY.
3-	522 0886 005	DC POWER SUPPLY 516D-1 -SEE FIG 1 NHA		REF
		-ATTACHING PARTS-		
- 1	542 6703 003	SCREW, CAPTIVE		1
R - 2	546 8190 003	SCREW, CAPTIVE		3
	5133-15-C	RING, RETAINER V79136 -340 0252 00-		2
	500 1099 003	WASHER		2
		. . . . *		
- 3	MT103A-12	. TERMINAL, LUG V92825 -306 0348 00-		11
		-ATTACHING PARTS-		
	MS35200-1	. SCREW, MACHINE V96906 -342 0131 00-		11
		. . . . *		
- 4	542 6784 002	. CHASSIS, LOWER, ROLLED		1
		-ATTACHING PARTS-		
	MS35200-13	. SCREW, MACHINE V96906 -342 0045 00-		6
		. . . . *		
- 5	542 6744 002	. INSULATOR, HEAT SINK		1
		-ATTACHING PARTS-		
	MS35200-13	. SCREW, MACHINE V96906 -342 0045 00-		5
	68-1660-40	. NUT, STOP V72962 -333 0605 00-		5
		. . . . *		
- 6	S83642	. CAPACITOR, 4UF V56289 -951 3999 00- C4		1
- 7	542 6692 002	. STRAP, CAPACITOR, MOUNTING		1
		-ATTACHING PARTS-		
	68NM-62	. NUT, STOP V72962 -333 0368 00-		2
		. . . . *		
- 8	543 4908 002	. CUSHION, VIBRATOR		1
- 9	304 0317 00	. TERMINAL, LUG		2
		-ATTACHING PARTS-		
	330 2290 00	. SCREW, MACHINE		2
	68-1660-40	. NUT, STOP V72962 -333 0605 00-		2
		. . . . *		
- 10	542 6796 00	. CABLE, DC POWER SUPPLY		1
		-ATTACHING PARTS-		
	330 2290 00	. SCREW, MACHINE		2
	506 5907 003	. WASHER		2
	68-1660-40	. NUT, STOP V72962 -333 0605 00-		2
		. . . . *		
- 11	7255	. CHOKE, FILTER V88063 -240 0614 00- L1, L2		2
		-ATTACHING PARTS-		
	MS35200-27	. SCREW, MACHINE V96906 -342 0064 00-		2
	310 0049 00	. WASHER, FLAT		2
		. . . . *		
- 12	542 6676 002	. INSULATOR, HEAT SINK, INNER		1
		-ATTACHING PARTS-		
	MS35216-10	. SCREW, MACHINE V96906 -343 0131 00-		4
- 13	4040	. TERMINAL, LUG V77147 -304 0332 00-		2
	310 0395 00	. WASHER, LOCK		2
	X-1980XA-MOD-	. POST, TERMINAL V71279 -306 0214 00-		2
		. . . . *		
- 14	542 6747 003	. SINK, HEAT		2
		-ATTACHING PARTS-		
	MS35216-11	. SCREW, MACHINE V96906 -343 0132 00-		4
- 15	4040	. TERMINAL, LUG V77147 -304 0332 00-		2
	310 0395 00	. WASHER, LOCK		2
	X-1980XA-MOD-	. POST, TERMINAL V71279 -306 0214 00-		2
		. . . . *		
- 16	7276207	. TRANSISTOR V16758 -352 0043 00- Q1, Q2		2
		-ATTACHING PARTS-		
	542 6682 002	. NUT, TRANSISTOR		2
	310 0080 00	. WASHER, LOCK		2
		. . . . *		
R - 17	HM-5601	. RESISTOR, 56 OHMS V01121 -745 9645 00- R3		1
		-ATTACHING PARTS-		

Collins

ILLUSTRATED PARTS CATALOG

	FIG. & INDEX NO.	PART NO.	NOMENCLATURE 1 2 3 4 5 6 7	USAGE CODE	UNITS PER ASSY.
	4-	542 5338 005	MODULATOR MODULE -SEE FIG 1 NHA-		REF
			-ATTACHING PARTS-		
R	- 1	546 8183 003	SCREW, CAPTIVE		1
R	- 2	546 8187 003	SCREW, CAPTIVE		1
R	- 3	546 8188 003	SCREW, CAPTIVE		1
		500 1099 003	WASHER		3
R	- 4	N219-7	GASKET V02697 -200 1675 00-		3
			. . . . *		
	- 5	542 6679 002	. COVER, TERMINAL, BOARD, ROLLED		1
			-ATTACHING PARTS-		
		MS35200-13	. SCREW, MACHINE V96906 -342 0045 00-		4
			. . . . *		
	- 6	21603-A	. TRANSFORMER V97965 -667 0260 00- T1		1
			-ATTACHING PARTS-		
		AN500C4-5	. SCREW, MACHINE V88044 -347 0007 00-		2
		68-1660-40	. NUT, STOP V72962 -333 0605 00-		2
			. . . . *		
	- 7	BC1536	. TRANSFORMER V97315 -677 1048 00- T2		1
			-ATTACHING PARTS-		
		AN500C4-5	. SCREW, MACHINE V88044 -347 0007 00-		2
		68-1660-40	. NUT, STOP V72962 -333 0605 00-		2
			. . . . *		
	- 8	BC2007	. TRANSFORMER V97315 -677 1047 00- T3		1
			-ATTACHING PARTS-		
		MS35216-24	. SCREW, MACHINE V96906 -343 0168 00-		3
		MS35216-25	. SCREW, MACHINE V96906 -343 0169 00-		1
	- 9	1126	. CLAMP, CABLE V71785 -139 0648 00-		1
		310 0282 00	. WASHER, LOCK		4
			. . . . *		
	- 10	380 1667 00	. RESISTOR, VARIABLE R4		1
			-ATTACHING PARTS-		
	- 11	334 0266 00	. NUT, HEX		1
		1714-05	. WASHER, LOCK V78189 -373 0090 00-		1
			. . . . *		
	- 12	542 6748 003	. BOARD, TERMINAL, SOLDERED		1
			-ATTACHING PARTS-		
	- 13	AN500C4-4	. SCREW, MACHINE V88044 -347 0006 00-		4
		68-1660-40	. NUT, STOP V72962 -333 0605 00-		4
			. . . . *		
	- 14	542 6746 003	. . BOARD, TERMINAL, ROLLED TB1		1
	- 15	714 1562 00	. . THERMISTOR, 1000 OHMS RT1		1
	- 16	RC20GF100K	. . RESISTOR, FIXED, 10 OHMS V81349 -745 1268 00- R16		1
	- 17	RC20GF221K	. . RESISTOR, FIXED, 220 OHMS V81349 -745 1324 00- R8		1
	- 18	RC20GF152K	. . RESISTOR, FIXED, 1500 OHMS V81349 -745 1359 00- R3		1
	- 19	RC32GF182K	. . RESISTOR, FIXED, 1200 OHMS V81349 -745 3363 00- R7		1
	- 20	RC20GF272K	. . RESISTOR, FIXED, 2700 OHMS V81349 -745 1370 00- R5, R9, R15		3
	- 21	RC20GF562K	. . RESISTOR, FIXED, 5600 OHMS V81349 -745 1384 00- R10		1
	- 22	RC20GF332K	. . RESISTOR, FIXED, 33,000 OHMS V81349 -745 1373 00- R6		1
	- 23	RC20GF120K	. . RESISTOR, FIXED, 12 OHMS V81349 -745 1272 00- R1		1
	- 24	747 9647 00	. . RESISTOR, FIXED, 50 OHMS R11		1
	- 25	747 9663 00	. . RESISTOR, FIXED, 5 OHMS R17		1
	- 26	747 9623 00	. . RESISTOR, FIXED, 0.4 OHMS R13		1
	- 27	RC42GF151K	. . RESISTOR, FIXED, 150 OHMS V81349 -745 5617 00- R2		1
	- 28	RC32GF152K	. . RESISTOR, FIXED, 1500 OHMS V81349 -745 3359 00- R18		1
	- 29	RC20GF222K	. . RESISTOR, FIXED, 2200 OHMS V81349 -745 1366 00- R12		1
	- 30	29F489G4	. . CAPACITOR, FIXED, 5 UF V24446 -184 7243 00- C6		1
	- 31	DT4-18	. TRANSISTOR V97966 -352 0044 00- Q1, Q3		2
			-ATTACHING PARTS-		

FIG. & INDEX NO.	PART NO.	NOMENCLATURE 1 2 3 4 5 6 7	USAGE CODE	UNITS PER ASSY.
4-				
- 32	313 0188 00	. NUT, HEX		2
	541 1242 003	. WASHER, PLASTIC		2
	541 1244 003	. WASHER, MICA		4
	541 1246 003	. WASHER, COPPER		2
		. . . . *		
- 33	542 6683 002	. BRACKET, TRANSISTOR, RIVETED		1
		-ATTACHING PARTS-		
	330 2290 00	. SCREW, MACHINE		2
	68-1660-40	. NUT, STOP V72962 -333 0605 00-		2
		. . . . *		
- 34	543 4611 002	. BRACKET, STIFFENING		1
R - 35	X-42759-MOD-	. TERMINAL, TURRET V98291 -306 1018 00-		4
		-ATTACHING PARTS-		
	MS35200-2	. SCREW, MACHINE V96906 -342 0132 00-		4
	542 7481 003	. WASHER		4
		. . . . *		
R - 36	X-42759-MOD-	. TERMINAL, TURRET V98291 -306 1018 00-		6
		ATTACHING PARTS-		
	MS35200-1	. SCREW, MACHINE V96906 -342 0131 00-		6
		. . . . *		
- 37	542 6794 00	. CABLE, MODULATOR		1
		-ATTACHING PARTS-		
	68-1660-40	. NUT, STOP V72962 -333 0605 00-		2
	330 2290 00	. SCREW, MACHINE		2
	506 5907 003	. WASHER		2
		. . . . *		
- 38	DA-15P	. . CONNECTOR, PLUG V91578 -371 0020 00- P1		1
- 39	2N45	. TRANSISTOR V24446 -352 0002 00- Q2		1
	OR			
	2N44	. TRANSISTOR V24446 -352 0004 00- Q2		1
- 40	304 0317 00	. TERMINAL, LUG E23		1
		-ATTACHING PARTS-		
	MS35198-12	. SCREW, MACHINE V96906 -342 0152 00-		1
	68-1660-40	. NUT, STOP V72962 -333 0605 00-		1
		. . . . *		
- 41	542 6782 004	. CHASSIS, MODULATOR, LOWER, ROLLED		1
		-ATTACHING PARTS-		
	MS35200-13	. SCREW, MACHINE V96906 -342 0045 00-		6
		. . . . *		
- 42	542 6747 003	. SINK, HEAT		2
R - 43	X-42759-MOD-	. TERMINAL, TURRET V98291 -306 1018 00-		1
		-ATTACHING PARTS-		
	MS35200-1	. SCREW, MACHINE V96906 -342 0131 00-		1
		. . . . *		
-44	542 6675 002	. INSULATOR, HEAT, SINK, OUTER		1
		-ATTACHING PARTS-		
	MS35216-11	. SCREW, MACHINE V96906 -343 0132 00-		4
	330 2291 00	. SCREW, MACHINE		4
	68-1660-40	. NUT, STOP V72962 -333 0605 00-		4
		. . . . *		
- 45	4040	. TERMINAL, LUG V77147 -304 0332 00- E21, E22		2
- 46	X-1980XA-MOD-	. POST, TERMINAL V71279 -306 0214 00- E18, 19, 20		3
- 47	310 0395 00	. WASHER, LOCK		3
- 48	7276207	. TRANSISTOR V16758 -352 0043 00- Q4, 5		2
		-ATTACHING PARTS-		
	542 6682 00	. NUT, TRANSISTOR		2
	310 0080 00	. WASHER, LOCK		2
		. . . . *		
- 49	544 5026 002	. INSULATOR, HEAT, SINK, 1/16		1
		-ATTACHING PARTS-		
	MS35200-11	. SCREW, MACHINE V96906 -342 0043 00-		4
		. . . . *		
R - 50	X-42759-MOD-	. TERMINAL, TURRET V98291 -306 1018 00-		5
		-ATTACHING PARTS-		

Collins

ILLUSTRATED PARTS CATALOG

	FIG. & INDEX NO.	PART NO.	NOMENCLATURE 1 2 3 4 5 6 7	USAGE CODE	UNITS PER ASSY.
	4-				
		MS35200-1	. SCREW, MACHINE V96906 -342 0131 00-		5
			. . . . *		
	- 51	542 6677 002	. CLAMP, CAPACITOR		1
			-ATTACHING PARTS-		
		MS35200-16	. SCREW, MACHINE V96906 -342 0048 00-		1
		330 2290 00	. SCREW, MACHINE		1
		68-1660-40	. NUT, STOP V72962 -333 0605 00-		1
		541 6021 002	. SLEEVE, SPACING		1
			. . . . *		
	- 52	29F444G4	. CAPACITOR, 50 UF V24446 -184 7240 00- C2, C4		2
	- 53	29F475G4	. CAPACITOR, 60 UF V24446 -184 7244 00- C1, C5		2
R	- 54	RC20GF221K	. RESISTOR, 820 OHMS V81349 -745 1324 00- R14		1
R	- 55	150D476X0035S2	. CAPACITOR 47 UF V56289 -184 7411 00- C3		1
	- 56	542 6743 003	. CHASSIS, MODULATOR, UPPER		1

TOP VIEW

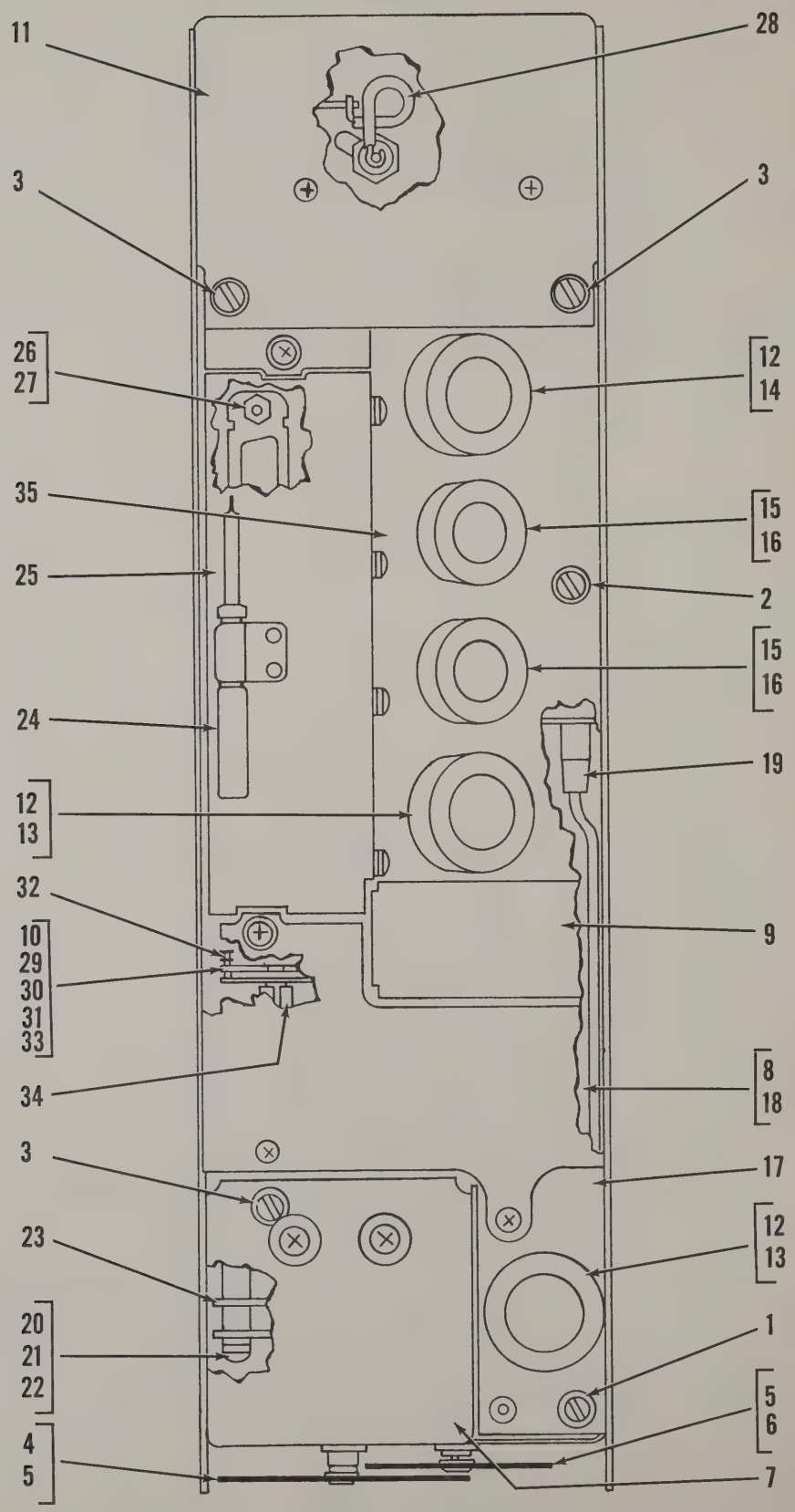
11
28
3
3
26
27
12
14
35
15
16
25
2
15
16
24
19
12
13
32
9
10
29
30
31
33
34
8
18
3
17
23
12
13
20
21
22
1
5
6
4
5
7

Collins

ILLUSTRATED PARTS CATALOG

	FIG. & INDEX NO.	PART NO.	NOMENCLATURE 1 2 3 4 5 6 7	USAGE CODE	UNITS PER ASSY.
	5-	542 6286 004	RF MODULE -SEE FIG 1 NHA-		REF
			-ATTACHING PARTS-		
R	- 1	546 8186 003	SCREW, CAPTIVE		1
R	- 2	546 8185 003	SCREW, CAPTIVE		1
	- 3	542 6697 003	SCREW, CAPTIVE		3
		5133-15-C	RING, RETAINING V79136 -340 0252 00-		5
			. . . . *		
	- 4	542 6638 002	. DIAL, MC, ROLLED		1
	- 5	542 6561 002	. SPRING, LOCKING		2
	- 6	542 6649 002	. DIAL, MC, ROLLED		1
	- 7	542 6669 002	. COVER, VHF OSCILLATOR, PRESSED		1
			-ATTACHING PARTS-		
		MS35198-13	. SCREW, MACHINE V96906 -342 0153 00-		1
		MS35214-13	. SCREW, MACHINE V96906 -343 0286 00-		6
			. . . . *		
	- 8	542 6593 002	. COVER, FREQUENCY, SELECTOR		1
			-ATTACHING PARTS-		
		MS35200-14	. SCREW, MACHINE V96906 -342 0046 00-		2
		MS35214-13	. SCREW, MACHINE V96906 -343 0286 00-		2
		310 0076 00	. WASHER, LOCK		1
		506 5907 003	. WASHER		1
			. . . . *		
	- 9	542 6719 003	. COVER, HF OSCILLATOR, ROLLED		1
			-ATTACHING PARTS-		
		MS35216-16	. SCREW, MACHINE V96906 -343 0137 00-		2
		310 0279 00	. WASHER, LOCK		2
			. . . . *		
	- 10	542 5255 002	. SPRING, EXTENSION		2
	- 11	542 6774 004	. COVER, P.A. ROLLED		1
			-ATTACHING PARTS-		
		MS35214-12	. SCREW, MACHINE V96906 -343 0285 00-		3
		MS35198-13	. SCREW, MACHINE V96906 -342 0153 00-		4
		310 0076 00	. WASHER, LOCK		1
		506 5907 003	. WASHER		1
			. . . . *		
	- 12	541 6553 003	. SHIELD, TUBE E1, 2, 5		3
	- 13	5670	. ELECTRON TUBE V94989 -253 0002 00- V1, V2		2
	- 14	5686	. ELECTRON TUBE V94989 -253 0009 00- V5		1
	- 15	541 6550 003	. SHIELD, TUBE E3, 4		2
	- 16	5654	. ELECTRON TUBE V94989 -253 0001 00- V3, V4		2
	- 17	542 6778 004	. VHF OSCILLATOR, SUB ASSEMBLY -SEE FIG 6-		1
			-ATTACHING PARTS-		
		MS35198-13	. SCREW, MACHINE V96906 -342 0153 00-		2
		MS35214-13	. SCREW, MACHINE V96906 -343 0286 00-		1
			. . . . *		
	- 18	542 6790 006	. FREQUENCY SELECTOR, SUB ASSEMBLY -SEE FIG 7-		1
	- 19	30-183-1	. CABLE, COAXIAL V98278 -426 1833 00-		1
	- 20	MS35216-16	. SCREW, MACHINE V96906 -343 0137 00-		4
	- 21	310 0279 00	. WASHER, LOCK		4
	- 22	506 5907 003	. WASHER		4
	- 23	542 6599 002	. WASHER, GROUNDING		4
	- 24	542 7354 002	. TOOL, TUNING		4
	- 25	542 7356 002	. COVER, AIR, CAPACITOR, RIVETED		1
			-ATTACHING PARTS-		
		MS35214-12	. SCREW, MACHINE V96906 -343 0285 00-		10
		310 0076 00	. WASHER, LOCK		10
			. . . . *		
	- 26	330 2290 00	. SCREW, MACHINE		2
	- 27	68-1660-40	. NUT, SELF LOCKING V72962 -333 0605 00-		2
	- 28	542 6798 002	. LOOP, COUPLING L38		1
	- 29	542 6624 002	. COLLAR		1
	- 30	335 0022 00	. SETSCREW		2
	- 31	542 6671 002	. COUPLING, ROLLED		1
	- 32	542 4528 002	. . PIN, GLIDE, SHOULDERED		2
	- 33	542 4530 002	. . DISK, FLOATING, COUPLING		1
	- 34	542 6617 002	. . SPIDER, COUPLING		1
	- 35	542 6777 004	. RF AND PA SUB ASSEMBLY -SEE FIG 8-		1
			. . . . *		

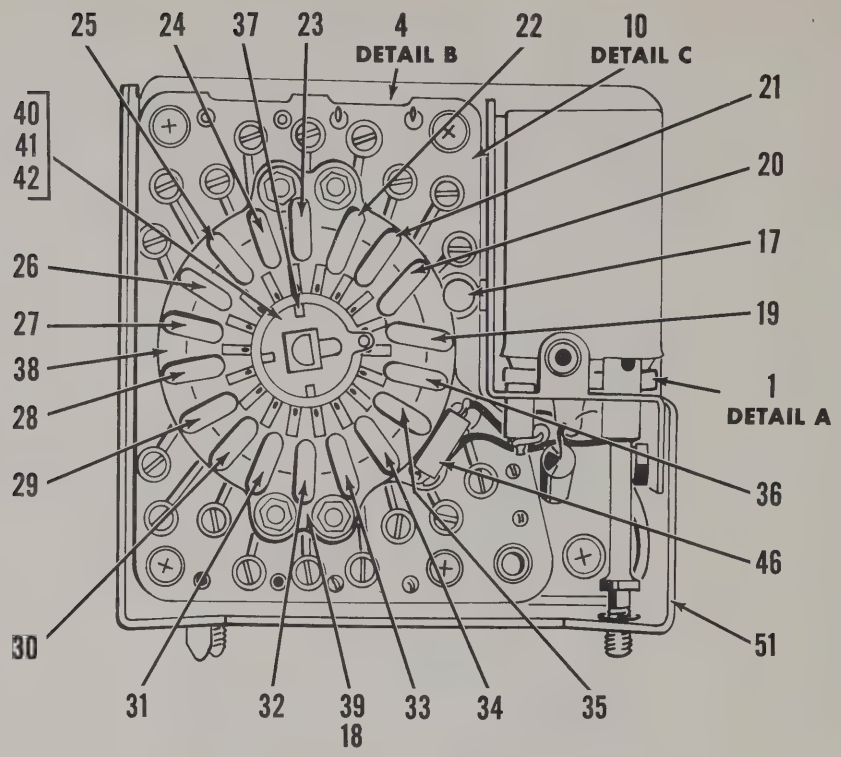

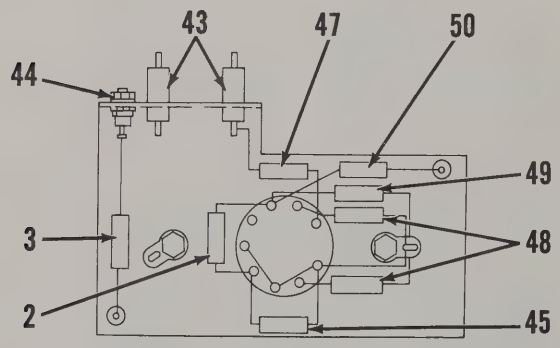

DETAIL A BOTTOM VIEW

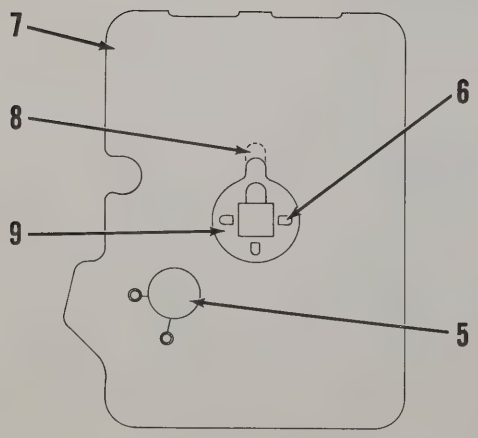

DETAIL B REAR VIEW

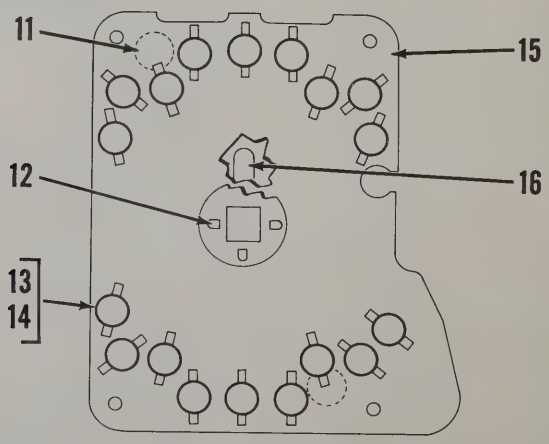

DETAIL C FRONT VIEW

VHF Oscillator
Figure 6

Collins

ILLUSTRATED PARTS CATALOG

FIG. & INDEX NO.	PART NO.	NOMENCLATURE 1 2 3 4 5 6 7	USAGE CODE	UNITS PER ASSY.
6-	542 6778 004	VHF OSCILLATOR SUB ASSY -SEE FIG 5 NHA-		REF
		-ATTACHING PARTS-		
	MS35200-13	SCREW, MACHINE V96906 -342 0045 00-		2
		. . . . *		
- 1	X7490-C90	. SOCKET, TUBE V80368 -220 1293 00- XV1		1
		-ATTACHING PARTS-		
	MS35216-11	. SCREW, MACHINE V96906 -343 0132 00-		2
	313 0132 00	. NUT, HEX		2
	310 0279 00	. WASHER, LOCK		2
	4007-4	. LUG, SOLDERED V77147 -304 0015 00- E11		1
	4040	. LUG, SOLDERED V77147 -304 0332 00- E12		1
- 2	912 2816 00	. CAPACITOR, 100 UUF C2		1
- 3	CC20CK010D	. CAPACITOR, 1 UUF V81350 -916 0071 00- C7		1
R - 4	542 6739 003	. TUNER, STEP L22		1
		-ATTACHING PARTS-		
	AN500C4-12	. SCREW, MACHINE V88044 -347 0012 00-		4
	541 5977 002	. SLEEVE, SPACING		4
	542 6599 002	. WASHER, GROUNDING		4
	542 6597 002	. SPACER, STATOR		4
	313 0132 00	. NUT, HEX		4
	541 5975 002	. SLEEVE, SPACING		4
		. . . . *		
- 5	CK61Y102Z	. . CAPACITOR, 1000 UF V81349 -913 1186 00- C6		1
- 6	540 8238 002	. . TAB, ROTOR		3
- 7	542 6764 004	. . STATOR, STEP, TUNER, RIVETED		1
- 8	542 6633 002	. . ARM, CONTACT		1
- 9	542 6632 002	. . ARM, CONTACT		1
		-ATTACHING PARTS-		
	542 6545 002	. . WASHER, THRUST, SWITCH		2
	542 6530 002	. . SPACER, ROTOR, CONTACT		1
		. . . . *		
- 10	542 6738 003	. COIL, SWITCH, ASSY S1C		1
- 11	CK61Y102Z	. . CAPACITOR, 1000 UF V81349 -913 1186 00- C5, C10		2
- 12	540 8238 002	. . TAB, SWITCH, ROTOR		3
- 13	542 6521 002	. . CORE, TUNING		18
- 14	542 6672 002	. . COIL, OSCILLATOR, 6.5 TURNS		18
- 15	542 6762 004	. . STATOR, COIL, SWITCH, RIVETED		1
- 16	542 6633 002	. . ARM, CONTACT, RIVETED		2
		-ATTACHING PARTS-		
	542 6530 002	. . SPACER, ROTOR, CONTACT		1
	542 6545 002	. . WASHER, THRUST, SWITCH		2
		. . . . *		
- 17	VC-20G	. CAPACITOR, VARIABLE V73899 -922 0414 00- C3		1
		-ATTACHING PARTS-		
	334 0273 00	. NUT, HEX		1
		. . . . *		
- 18	542 6737 003	. CRYSTAL, SWITCH ASSY S1D		1
		-ATTACHING PARTS-		
	506 5907 003	. WASHER, SPECIAL		4
	313 0132 00	. NUT, HEX		2
	310 0279 00	. WASHER, LOCK		2
	506 6946 002	. WASHER, TENSION		2
	542 6598 002	. POST, COVER, LOCATING		2
		. . . . *		
- 19	290 8401 00	. . CRYSTAL UNIT, QUARTZ, 63737.500 KC Y1		1
- 20	290 8402 00	. . CRYSTAL UNIT, QUARTZ, 64237.500 KC Y2		1
- 21	290 8403 00	. . CRYSTAL UNIT, QUARTZ, 64737.500 KC Y3		1
- 22	290 8404 00	. . CRYSTAL UNIT, QUARTZ, 65237.500 KC Y4		1
- 23	290 8405 00	. . CRYSTAL UNIT, QUARTZ, 65737.500 KC Y5		1
- 24	290 8406 00	. . CRYSTAL UNIT, QUARTZ, 66237.500 KC Y6		1
- 25	290 8407 00	. . CRYSTAL UNIT, QUARTZ, 66737.500 KC Y7		1
- 26	290 8408 00	. . CRYSTAL UNIT, QUARTZ, 67237.500 KC Y8		1
- 27	290 8409 00	. . CRYSTAL UNIT, QUARTZ, 67737.500 KC Y9		1
- 28	290 8410 00	. . CRYSTAL UNIT, QUARTZ, 68237.500 KC Y10		1
- 29	290 8411 00	. . CRYSTAL UNIT, QUARTZ, 68737.500 KC Y11		1

FIG. & INDEX NO.	PART NO.	NOMENCLATURE 1 2 3 4 5 6 7	USAGE CODE	UNITS PER ASSY.
6-				
- 30	290 8412 00	. . CRYSTAL UNIT, QUARTZ, 69237.500 KC Y12		1
- 31	290 8413 00	. . CRYSTAL UNIT, QUARTZ, 69737.500 KC Y13		1
- 32	290 8414 00	. . CRYSTAL UNIT, QUARTZ, 70237.500 KC Y14		1
- 33	290 8415 00	. . CRYSTAL UNIT, QUARTZ, 70737.500 KC Y15		1
- 34	290 8416 00	. . CRYSTAL UNIT, QUARTZ, 71237.500 KC Y16		1
- 35	290 8417 00	. . CRYSTAL UNIT, QUARTZ, 71737.500 KC Y17		1
- 36	290 8418 00	. . CRYSTAL UNIT, QUARTZ, 72237.500 KC Y18		1
- 37	540 8238 002	. . TAB, SWITCH, ROTOR		3
- 38	542 6531 002	. . INSULATOR, CRYSTAL		1
- 39	542 6760 004	. . STATOR, CRYSTAL, SWITCH, PRESSED		1
- 40	542 6632 002	. . ARM, CONTACT		2
- 41	542 6545 002	. . WASHER, THRUST, SWITCH		2
- 42	542 6530 002	. . SPACER, ROTOR, CONTACT		1
- 43	2466 W5T0 102P	. CAPACITOR, 1000 UUF V72982 -913 3208 00- C8, C9		2
- 44	X-1980XA-MOD-	. POST, INSULATED V71279 -306 0214 00- E10		1
		-ATTACHING PARTS-		
	313 0163 00	. NUT, HEX		1
	310 0395 00	. WASHER, LOCK		1
		. . . . *		
- 45	DA934-035	. CAPACITOR, 5 UUF V71590 -913 0223 00- C1		1
- 46	10100-25	. CHOKE, R.F., 33 UH, V82142 -240 0068 00- L20		1
- 47	10200-28	. CHOKE, R.F., 2.2 UH V82142 -240 0156 00- L23		1
- 48	RC20GF271K	. RESISTOR, 270 OHMS V81349 -745 1328 00- R1, R2		2
- 49	RC20GF682K	. RESISTOR, 6800 OHMS V81349 -745 1387 00- R3		1
- 50	RC20GF105K	. RESISTOR, 1 MEGOHM V81349 -745 1478 00- R4		1
	151E44R	. RESISTOR, 8000 OHMS V56289 -747 9613 00- R5, R6		2
	CC20CK020D	. CAPACITOR, 2UUF V81350 -916 0076 00- C4		1
	542 6631 002	. COIL, VHF, 4-1/2 TURNS L21		1
- 51	542 6668 002	. CHASSIS, VHF OSCILLATOR, PRESSED		1

Collins

ILLUSTRATED PARTS CATALOG

FIG. & INDEX NO.	PART NO.	NOMENCLATURE 1 2 3 4 5 6 7	USAGE CODE	UNITS PER ASSY.
7-	542 6790 006	FREQUENCY SELECTOR SUB ASSY -SEE FIG 5 NHA-		REF
		-ATTACHING PARTS-		
	MS35200-13	SCREW, MACHINE V96906 -342 0045 00-		4
		. . . . *		
- 1	542 6634 002	. MOTOR, PINNED B1		1
		-ATTACHING PARTS-		
	AN500C6R-5	. SCREW, MACHINE V88044 -347 0034 00-		2
	AN500C6R-3	. SCREW, MACHINE V88044 -347 0032 00-		1
	310 0282 00	. WASHER, LOCK		3
		. . . . *		
- 2	43A171	. . MOTOR, DC V25140 -230 0267 00-		1
- 3	542 6553 00	. . GEAR, 32 TOOTH		1
		-ATTACHING PARTS-		
	311 0418 00	. . PIN, ROLL		1
- 4	545 7123 002	. . CAP, MOTOR, SOLDERED		1
- 5	10102-32	. . COIL, R.F. V82142 -240 0149 00-		2
- 6	542 6623 002	. BOARD, TERMINAL, RELAY ROLLED TB1		1
		-ATTACHING PARTS-		
	AN500C4-8	. SCREW, MACHINE V88044 -347 0010 00-		2
	504 0744 003	. WASHER, FLAT		2
		. . . . *		
- 7	542 6740 003	. SWITCH, H.F. OSCILLATOR		1
- 8	290 8419 00	. . CRYSTAL UNIT, QUARTZ, 8525.000 KC Y19		1
- 9	290 8420 00	. . CRYSTAL UNIT, QUARTZ, 8575.000 KC Y20		1
- 10	290 8421 00	. . CRYSTAL UNIT, QUARTZ, 8625.000 KC Y21		1
- 11	290 8422 00	. . CRYSTAL UNIT, QUARTZ, 8675.000 KC Y22		1
- 12	290 8423 00	. . CRYSTAL UNIT, QUARTZ, 8725.000 KC Y23		1
- 13	290 8424 00	. . CRYSTAL UNIT, QUARTZ, 8775.000 KC Y24		1
- 14	290 8425 00	. . CRYSTAL UNIT, QUARTZ, 8825.000 KC Y25		1
- 15	290 8426 00	. . CRYSTAL UNIT, QUARTZ, 8875.000 KC Y26		1
- 16	290 8427 00	. . CRYSTAL UNIT, QUARTZ, 8925.000 KC Y27		1
- 17	290 8428 00	. . CRYSTAL UNIT, QUARTZ, 8975.000 KC Y28		1
- 18	290 8429 00	. . CRYSTAL UNIT, QUARTZ, 9025.000 KC Y29		1
- 19	290 8430 00	. . CRYSTAL UNIT, QUARTZ, 9075.000 KC Y30		1
- 20	290 8431 00	. . CRYSTAL UNIT, QUARTZ, 9125.000 KC Y31		1
- 21	290 8432 00	. . CRYSTAL UNIT, QUARTZ, 9175.000 KC Y32		1
R - 22	290 8433 00	. . CRYSTAL UNIT, QUARTZ, 9225.000 KC Y33		1
- 23	290 8434 00	. . CRYSTAL UNIT, QUARTZ 9275.000 KC Y34		1
- 24	290 8435 00	. . CRYSTAL UNIT, QUARTZ, 9325.000 KC Y35		1
- 25	290 8436 00	. . CRYSTAL UNIT, QUARTZ, 9375.000 KC Y36		1
- 26	290 8437 00	. . CRYSTAL UNIT, QUARTZ, 9425.000 KC Y37		1
- 27	290 8438 00	. . CRYSTAL UNIT, QUARTZ, 9475.000 KC Y38		1
- 28	542 6766 004	. . STATOR, F.F. OSCILLATOR, SWITCH S2B, S2C		2
- 29	542 6670 002	. . ARM, CONTACT, RIVETED		2
		-ATTACHING PARTS-		
- 30	5100-25	. . RING, RETAINING V89462 -340 0038 00-		1
	540 3005 003	. . WASHER		1
	542 1604 003	. . WASHER		1
		. . . . *		
- 31	542 6523 002	. . SHAFT, H.F. OSCILLATOR		1
	542 6524 002	. . BUSHING		4
	542 6717 003	. . INSULATOR, CRYSTAL, H.F. OSCILLATOR		2
- 32	542 6793 00	. CABLE, FREQUENCY, SELECTOR		1
	541 5187 002	. . BUTTON, CABLE		1
		-ATTACHING PARTS-		
	MS35216-15	. . SCREW, MACHINE V96906 -343 0136 00-		1
		. . . . *		
R - 33	DB-25P	. . CONNECTOR, 25 PIN V91578 -371 0031 00- P3		1
		-ATTACHING PARTS-		
	330 2290 00	. SCREW, MACHINE		2
	68-1660-40	. TERMINAL LUG, SOLDERED V72962 -333 0605 00-		1
		. . . . *		

FIG. & INDEX NO.	PART NO.	NOMENCLATURE 1 2 3 4 5 6 7	USAGE CODE	UNITS PER ASSY.
7-				
- 34	4040	. TERMINAL LUG, SOLDERED V77147 -304 0332 00-		1
		-ATTACHING PARTS-		
	MS35214-11	. SCREW, MACHINE V96906 -343 0284 00-		1
	310 0279 00	. WASHER, SPLIT		1
		. . . . *		
- 35	MT103A-12	. TERMINAL, INSULATING V92825 -306 0348 00- E13		1
		-ATTACHING PARTS-		
	MS35216-1	. SCREW, MACHINE V96906 -343 0122 00-		1
		. . . . *		
- 36	974 0567 00	. RELAY, ARMATURE K1		1
		-ATTACHING PARTS-		
	MS35200-11	. SCREW, MACHINE V96906 -342 0043 00-		2
	68-1660-40	. NUT, STOP V72962 -333 0605 00-		2
		. . . . *		
- 37	269 1872 00	. SWITCH, WAFER S2A		1
		-ATTACHING PARTS-		
	MS35216-16	. SCREW, MACHINE V96906 -343 0137 00-		2
	541 5979 002	. SLEEVE, SPACING		2
		. . . . *		
- 38	542 6730 003	. PLATE, REAR GEAR, PRESSED		1
		-ATTACHING PARTS-		
	MS35216-25	. SCREW, MACHINE V96906 -343 0169 00-		1
	MS35216-24	. SCREW, MACHINE V96906 -343 0168 00-		1
	310 0282 00	. WASHER, SPLIT		2
		. . . . *		
- 39	JS-5	. ACTUATOR, SWITCH V91929 -260 0945 00-		1
- 40	1SM3	. SWITCH, SENSITIVE V91929 -266 0043 00- S4		1
		-ATTACHING PARTS-		
	MS35216-6	. SCREW, MACHINE V96906 -343 0127 00-		2
	68-1660-26	. NUT, ELASTIC STOP V72962 -333 0604 00-		1
	310 6320 00	. WASHER, FLAT		1
		. . . . *		
- 41	JS-5	. ACTUATOR, SWITCH V91929 -260 0945 00-		1
- 42	1SM3	. SWITCH, SENSITIVE V91929 -266 0043 00- S3		1
		-ATTACHING PARTS-		
	MS35216-5	. SCREW, MACHINE V96906 -343 0126 00-		2
	MS35216-8	. SCREW, MACHINE V96906 -343 0005 00-		1
	310 6320 00	. WASHER, FLAT		1
		. . . . *		
- 43	542 6546 002	. PLATE, SWITCH MOUNTING		1
- 44	541 6017 002	. SLEEVE,SPACING		2
- 45	542 6584 002	. SHAFT, STUB		1
		-ATTACHING PARTS-		
	MS35200-12	. SCREW, MACHINE V96906 -342 0044 00-		1
		. . . . *		
- 46	542 6645 002	. GEAR, 30 TOOTH, PRESSED		1
		-ATTACHING PARTS-		
	5133-15-C	. RING, RETAINING V79136 -340 0252 00-		1
	542 1588 003	. WASHER		2
		. . . . *		
	GB2-1/2 4	. . BEARING, NEEDLE V60380 -309 0301 00-		1
	542 6585 002	. . GEAR, 30 TOOTH		1
- 47	542 6647 002	. CLUTCH, KC A/P		1
- 48	542 6652 002	. . GEAR, CLUTCH, 66 TOOTH		2
- 49	546 2213 002	. . SPRING, BELLVILLE CLUTCH		2
- 50	542 4525 002	. . DISC, CLUTCH		2
- 51	542 6646 002	. . SHAFT, A P 2, PINNED		1
		-ATTACHING PARTS-		
- 52	542 4524 002	. . NUT, SELFLOCKING		1
-52A	540 3040 00	. . WASHER		1
		. . . . *		
- 53	542 6588 002	. . . SHAFT, K C DRIVE		1

FIG. & INDEX NO.	PART NO.	NOMENCLATURE 1 2 3 4 5 6 7	USAGE CODE	UNITS PER ASSY.
7-				
- 54	542 4501 002	. . . STOP, WHEEL, 24 POSITION		1
- 55	542 4509 002	. . . HUB, CLUTCH		1
		-ATTACHING PARTS-		
	311 0417 00	. . . PIN, ROLL		1
		. . . . *		
- 56	542 6642 002	. SHAFT, 30 TOOTH, PRESSED		1
- 57	542 6643 002	. CAM, QUADRANT BLANKER		1
- 58	542 4513 002	. COLLAR, 1/4 BORE		2
		-ATTACHING PARTS-		
	335 0069 00	. SETSCREW		4
		. . . . *		
	542 1588 003	. WASHER		1
- 59	542 6644 002	. ARM, CAM, PRESSED		1
- 60	542 6583 002	. GEAR, 54 TOOTH		1
- 61	A-110-1	. BEARING V70417 -309 0074 00-		1
		-ATTACHING PARTS-		
	5133-12-C	. RING, RETAINING V79136 -340 0250 00-		1
		. . . . *		
- 62	542 6641 002	. CAM, HALF BLANKER		1
- 63	542 6575 002	. SPRING, COMPRESSION		1
- 64	542 6728 003	. DIFFERENTIAL		1
- 65	542 6562 002	. . GEAR, 64 TOOTH		1
- 66	542 6563 002	. . GEAR, 36 TOOTH		1
- 67	542 6565 002	. . GEAR, 20 TOOTH		1
- 68	542 6639 002	. . GEAR, 17/30 TOOTH		2
		-ATTACHING PARTS-		
	NAS-51-15	. . RING, RETAINING V89462 -340 0023 00-		4
		. . . . *		
- 69	542 6568 002	. . GEAR, 54 TOOTH		1
		-ATTACHING PARTS-		
	MS35216-11	. . SCREW, MACHINE V96906 -343 0132 00-		2
		. . . . *		
- 70	542 6569 002	. . SHAFT, STUB		2
	542 6564 002	. . BEARING		1
	542 1602 003	. . WASHER		1
- 71	542 6640 002	. . SHAFT, 34 TOOTH, PRESSED		1
- 72	542 6735 003	. SOLENOID ASSY, SIDE TERMINAL		1
		-ATTACHING PARTS-		
	MS35216-12	. SCREW, MACHINE V96906 -343 0133 00-		3
		. . . . *		
- 73	542 6650 002	. SWITCH, LEAF, DPST		2
- 74	MS35214-7	. . SCREW, MACHINE V96906 -343 0303 00-		2
- 75	542 4595 002	. . INSULATOR, SWITCH STACK		2
- 76	542 4598 002	. . INSULATOR, CONTACT ARM		2
- 77	542 6664 002	. . ARM, CONTACT		1
- 78	542 6665 002	. . ARM, CONTACT		1
- 79	542 6528 002	. . INSULATOR, CONTACT ARM		1
- 80	542 6527 002	. . INSULATOR, CONTACT ARM		1
- 81	542 6663 002	. . ARM, CONTACT		1
- 82	542 6529 002	. . PIN, SWITCH		1
- 83	542 4599 002	. . ARM, CONTACT		1
- 84	542 6636 002	. CLUTCH, M.C. A/P		1
- 85	542 4524 002	. . NUT, SELF LOCKING		1
- 85A	540 3040 00	. . WASHER		1
- 86	546 2213 002	. . SPRING, BELLVILLE CLUTCH		2
- 87	542 4525 002	. . DISC, CLUTCH		2
- 88	542 4560 002	. . GEAR, CLUTCH, 52 TOOTH		2
- 89	542 6635 002	. . SHAFT, AP1, PINNED		1
- 90	542 6554 002	. . . SHAFT		1
- 91	542 6555 002	. . . STOP WHEEL, 18 POSITION		1
- 92	542 4509 002	. . . HUB, CLUTCH		1
		-ATTACHING PARTS-		
	311 0417 00	. . . PIN, ROLL		1
		. . . . *		

FIG. & INDEX NO.	PART NO.	NOMENCLATURE 1 2 3 4 5 6 7	USAGE CODE	UNITS PER ASSY.
7-				
- 93	542 6734 003	. SOLENOID ASSY, REAR TERMINAL		1
		-ATTACHING PARTS-		
	MS35200-12	. SCREW, MACHINE V96906 -342 0044 00-		3
		. . . . *		
R	546 2215 002	. . PAWL ASSY.		1
		-ATTACHING PARTS-		
	542 4510 002	. . SCREW, PIVOT, NO. 4		2
		. . . . *		
	542 4723 003	. . WINDING, SOLENOID		1
	542 6822 003	. . SHELL, SOLENOID, REAR TERMINAL		1
- 94	542 6581 002	. SPRING, EXTENSION		1
- 95	542 6651 002	. PLATE, SOLENOID MOUNTING, PRESSED		1
		-ATTACHING PARTS-		
	MS35216-16	. SCREW, MACHINE V96906 -343 0137 00-		4
	310 0279 00	. WASHER, SPLIT		4
	4040	. TERMINAL, LUG V77147 -304 0332 00-		1
	542 6549 002	. SLEEVE, SHOULDERED		2
	542 6550 002	. SLEEVE, SPACING		2
		. . . . *		
- 96	542 6648 002	. . CAM, K.C. DRIVE, PRESSED		1
- 97	542 6724 003	. . . CAM, K.C. DRIVE		1
- 98	542 6587 002	. . . GEAR, 28 TOOTH		1
- 99	542 4513 002	. COLLAR		1
		-ATTACHING PARTS-		
	335 0069 00	. SETSCREW		2
		. . . . *		
-100	542 6589 002	. GEAR, 28 TOOTH		1
-101	542 6556 002	. GEAR, 48 TOOTH		1
-102	542 4513 002	. COLLAR		1
		-ATTACHING PARTS-		
	335 0069 00	. SETSCREW		2
		. . . . *		
-103	542 6557 002	. GEAR, 41 TOOTH		1
-104	542 4513 002	. COLLAR		1
		-ATTACHING PARTS-		
	335 0069 00	. SETSCREW		2
		. . . . *		
-105	542 6590 002	. SHAFT, K.C. DIAL		1
-106	542 4513 002	. COLLAR		1
		-ATTACHING PARTS-		
	335 0069 00	. SETSCREW		2
		. . . . *		
-107	82000-LK	. SWITCH, WAFER V81716 -269 1871 00- S1B		1
		-ATTACHING PARTS-		
	AN500C4-12	. SCREW, MACHINE V96906 -347 0012 00-		2
	8942	. WASHER, NONMETALLIC V81716 -302 0262 00-		2
		. . . . *		
-108	541 5977 002	. SLEEVE, SPACING		2
-109	269 1870 00	. SWITCH, WAFER S1A		1
-110	541 5981 002	. SLEEVE, SPACING		2
-111	542 6560 002	. BRACKET, SHAFT		1
		-ATTACHING PARTS-		
	MS35216-12	. SCREW, MACHINE V96906 -343 0133 00-		2
-112	542 1600 003	. WASHER		9
		. . . . *		
-113	542 6637 002	. SHAFT, VHF OSCILLATOR, PINNED		1
-114	542 6559 002	. . SHAFT, VHF		1
-115	542 6558 002	. . GEAR, 41 TOOTH		1
		-ATTACHING PARTS-		
	311 0417 00	. . PIN, ROLL		1
		. . . . *		
-116	542 5729 003	. PLATE, GEAR, FRONT		1
		-ATTACHING PARTS-		
	MS35216-25	. SCREW, MACHINE V96906 -343 0169 00-		2
	AN500C6R-24	. SCREW, MACHINE V88044 -347 0045 00-		2
	310 0282 00	. WASHER		4
		. . . . *		

	FIG. & INDEX NO.	PART NO.	NOMENCLATURE 1 2 3 4 5 6 7	USAGE CODE	UNITS PER ASSY.
	8-				
	- 22	RC20GF223K	. . RESISTOR, 2200 OHMS V81349 -745 1408 00- R12		1
		RC20GF333K	. . RESISTOR, 33,000 OHMS V81349 -745 1415 00- R18, R21		2
		RC20GF473K	. . RESISTOR, 47,000 OHMS V81349 -745 1422 00- R11, R28		2
	- 23	RC20GF104K	. . RESISTOR, 100,000 OHMS V81349 -745 1436 00- R9		1
		747 9664 00	. . RESISTOR, 800 OHMS R15		1
	- 24	151E148	. . RESISTOR, 3300 OHMS V56289 -747 9608 00- R26		1
	- 25	747 9662 00	. . RESISTOR, 1900 OHMS R27		1
R	- 26		. . NOT USED		
	- 27	VCM15E510G	. . CAPACITOR, 51 UUF V72136 -912 0472 00- C16		1
	- 28	VCM15E151G	. . CAPACITOR, 150 UUF V72136 -912 0505 00- C15		1
	- 29	912 0668 00	. . CAPACITOR, 1000 UUF C18, C23, C24, C29, C30, C33, C35, C48, C50		9
	- 30	M38-1000	. . CAPACITOR, 1000 UUF V53021 -912 0938 00- C22, C28, C34, C46, C52, C53		6
	- 31	CK61Y102Z	. . CAPACITOR, 1000 UUF V81349 -913 1186 00- C11, C17		2
	- 32	CK62Y472Z	. . CAPACITOR, 4700 UUF V81349 -913 1187 00- C14		1
		2466 W5TO 102P	. . CAPACITOR, 1000 UUF V72982 -913 3208 00- C42, C54, C55		3
	- 33	CC20LH150G	. . CAPACITOR, 15 UUF V81350 -916 0210 00- C12		1
		542 6627 002	. . COIL, R.F., NO. 2,4, L29, L31		2
		542 6628 002	. . COIL, R.F., NO. 6 L33		1
	- 34	241 0276 00	. . FILTER, FEED THRU FL1, FL2, FL3, FL4, FL5		5
		VCM15E470G	. . CAPACITOR, 47 UUF V72136 -912 0469 00- C56		1
R	- 34A	747 5310 00	. . RESISTOR R16		1
	- 35	542 6624 002	. COLLAR		1
	- 36	542 6671 002	. COUPLING, ROLLED		1
			-ATTACHING PARTS-		
		335 0022 00	. SETSCREW		2
			. . . . *		
	- 37	542 5255 002	. SPRING, EXTENSION		2
	- 38	CC30CH200J	. CAPACITOR, 20UUF V81350 -916 4188 00- C36		1
	- 39	542 6792 00	. CABLE, R.F. AND P.A. SUB ASSY		1
	- 40	DA-15P	. . CONNECTOR, 15 PIN V91578 -371 0020 00- P2		1
	- 40A	542 6736 003	. . CHASSIS, R.F., PRESSED		1
			-ATTACHING PARTS-		
		AN500B4R-4	. . SCREW, MACHINE V88044 -347 0090 00-		4
		310 0076 00	. . WASHER, LOCK		4
			. . . . *		
R	- 40B	FT-SM-1	. . . TERMINAL, FEED THRU, INSULATED V98291 -306 0323 00-		3
R	- 40C	ST-SM-1	. . . TERMINAL, TIE POINT V98291 -306 0324 00- E25-28		4
R	- 40D	SKT-2-BC	. . . JACK, TIP V98291 -360 0087 00- J3		1
R	- 40E	542 6786 005	. . . CHASSIS, R.F.		1
	- 41	542 6776 004	. P.A. SUB ASSY		1
			-ATTACHING PARTS-		
		MS35198-13	. SCREW, MACHINE V96906 -342 0153 00-		2
		68NM-40	. NUT, ELASTIC STOP V72962 -333 0347 00-		1
			. . . . *		
	- 42	542 6610 002	. . PLATE, ROTOR, END, P.A.		1
			-ATTACHING PARTS-		
		MS35214-13	. . SCREW, MACHINE V96906 -343 0286 00-		5
		542 6611 002	. . POST, MOUNTING		2
		542 6612 002	. . POST, TRIMMER, MOUNTING		1
		310 0076 00	. . WASHER, SPLIT		5
			. . . . *		
R	- 43	922 0605 00	. . CAPACITOR, VARIABLE, 0.8 UUF TO 9.5 UUF C44		1
	- 44	10102-34	. . COIL, R.F. V82142 -240 0150 00- L36,L39,L40		3
	- 45	148-3-MOD-	. . CAPACITOR, VARIABLE 0.3 UUF TO 0.35 UUF V74970 -922 0454 00- C45		1
			-ATTACHING PARTS-		
		MS35214-11	. . SCREW, MACHINE V96906 -343 0284 00-		2

Collins

ILLUSTRATED PARTS CATALOG

FIG. & INDEX NO.	PART NO.	NOMENCLATURE 1 2 3 4 5 6 7	USAGE CODE	UNITS PER ASSY.
8-				
	310 0076 00	. . WASHER, SPLIT		2
		. . . . *		
- 46	913 3741 00	. . CAPACITOR, FIXED, 1000 UUF C43		1
		-ATTACHING PARTS-		
	MS35214-24	. . SCREW, MACHINE V96906 -343 0329 00-		1
	MS35198-23	. . SCREW, MACHINE V96906 -342 0166 00-		1
	3017-6	. . LUG, SOLDERED V77147 -304 3020 00- E42		1
	310 0077 00	. . WASHER, SPLIT		2
	304 0318 00	. . TERMINAL, LUG		1
		. . . . *		
- 47	6884	. . ELECTRON TUBE V86684 -256 0118 00- V6		1
- 48	542 6654 002	. . STATOR, P.A., SOLDERED		1
- 49	543 7996 002	. . TAB, TUBE, RETAINER		1
		-ATTACHING PARTS-		
- 50	X1676A	. . POST, CERAMIC V71590 -190 0071 00-		2
	MS35198-11	. . SCREW, MACHINE V96906 -342 0151 00-		2
	313 0156 00	. . NUT, HEX		2
	506 5902 003	. . WASHER, .		6
	310 0076 00	. . WASHER, SPLIT		2
	542 6600 002	. . STUD, SHOULDERED		2
	200 0268 00	. . WASHER, NONMETALLIC		4
		. . . . *		
- 51	542 6834 002	. . RING, ANODE CONTACT, MOUNTING, SOLDERED		1
		-ATTACHING PARTS-		
	313 0156 00	. . NUT, HEX		1
	506 5902 003	. . WASHER		3
	542 6600 002	. . STUD, SHOULDERED		1
	200 0268 00	. . WASHER, NONMETALLIC		2
	MS35198-11	. . SCREW, MACHINE V96906 -342 0151 00-		1
- 52	2X783	. . POST, CERAMIC V71590 -190 1105 00-		1
	310 0076 00	. . WASHER, SPLIT		1
- 53	542 6653 002	. . MOUNT, STATOR, BRAZED		1
		. . . . *		
- 54	542 6797 002	. . COIL, PLATE L37		1
- 55	3950	. . CONNECTOR, R.F., UG/1051 V74868 -357 9210 00- P1		1
		-ATTACHING PARTS-		
	AN936A516	. . WASHER, LOCK V88044 -373 0084 00-		1
	542 6620 002	. . GROUND, LUG		1
	542 1601 003	. . WASHER		1
		. . . . *		
- 56	CC20CH120J	. . CAPACITOR, FIXED, 12 UUF V81350 -916 0141 00- C37		1
- 57	CK61Y102Z	. . CAPACITOR, FIXED, 1000 UUF V81349 -913 1186 00- C39		1
- 58	VC-9G	. . CAPACITOR, VARIABLE, 0.6 UUF TO 0.8 UUF V73899 -922 0390 00- C38		1
R - 59	327-000 X5V0 1022	. . CAPACITOR, FIXED,1000 UUF V72982 -913 1292 00-C41		
		-ATTACHING PARTS-		
	AN345B-416	. . NUT, HEX V88044 -313 0003 00-		1
	1214-05	. . WASHER, LOCK V78189 -373 0151 00-		1
		. . . . *		
- 60	542 6799 002	. . COIL, DRIVER TANK L34		1
- 61	542 6733 003	. . SOCKET, P.A. TUBE XV6		1
- 62	542 6551 002	. . CLAMP, TUBE SOCKET		3
		-ATTACHING PARTS-		
	MS35214-12	. . SCREW, MACHINE V96906 -343 0285 00-		3
	310 0076 00	. . WASHER, SPLIT		
		. . . . *		
- 63	542 6655 002	. . STATOR, DRIVER		1
		-ATTACHING PARTS-		
	542 6613 002	. . POST, DRIVER, STATOR MOUNTING		2
	343 0382 00	. . SCREW, MACHINE		2

FIG. & INDEX NO.	PART NO.	NOMENCLATURE 1 2 3 4 5 6 7	USAGE CODE	UNITS PER ASSY.
8-				
	200 0268 00	. . WASHER, NONMETALLIC		2
		. . . . *		
- 64	B11-W1K	. . RESISTOR, VARIABLE, 1000 OHMS V91637 -377 9189 00- R25		1
		-ATTACHING PARTS-		
R	MS35216-9	. . SCREW, MACHINE V96906 343-0129-00		2
	MS35198-12	. . SCREW, MACHINE V96906 -342 0152 00-		1
	313 0156 00	. . NUT, HEX		1
	310 0076 00	. . WASHER, SPLIT		1
	542 6625 00	. . BRACKET, POT, P.A.		1
		. . . . *		
- 65	B11-W5K	. . RESISTOR, VARIABLE, 5000 OHMS V91637 -377 9191 00- R24		1
- 66	306 0234 00	. . POST, INSULATED		1
- 67	4040	. . TERMINAL, LUG V77147 -304 0332 00-		1
		-ATTACHING PARTS-		
	343 0258 00	. . SCREW, MACHINE		1
	310 0076 00	. . WASHER, SPLIT		1
	310 6320 00	. . WASHER, FLAT		4
		. . . . *		
- 68	542 6629 002	. . TERMINAL, HEX		1
		-ATTACHING PARTS-		
	310 0076 00	. . WASHER, SPLIT		1
		. . . . *		
- 69	542 6618 002	. . SPRING, GROUNDING		2
		-ATTACHING PARTS-		
	MS35214-12	. . SCREW, MACHINE V96906 -343 0285 00-		1
	313 0156 00	. . NUT, HEX		1
	310 0076 00	. . WASHER, SPLIT		1
	AN936B4B	. . WASHER, LOCK V88044 -373 7010 00-		2
		. . . . *		
- 70	542 6658 002	. . SHAFT, P.A., ROTOR, PINNED		1
		-ATTACHING PARTS-		
	334 4030 00	. . NUT, HEX		1
		. . . . *		
- 71	542 6656 002	. . HUB, DRIVER ROTOR, SOLDERED		1
		-ATTACHING PARTS-		
	311 0079 00	. . PIN, TAPER		1
		. . . . *		
- 72	542 6657 002	. . SHAFT, P.A. ROTOR, SOLDERED		1
	SFR166K25	. . BEARING, FLANGED V83086 -309 0705 00-		1
	SR166K25	. . BEARING V83086 -309 0706 00-		1
	542 6595 00	. . RETAINER, BEARING		1
- 73	542 6771 004	. . PLATE, P.A. MOUNTING, ROLLED		1

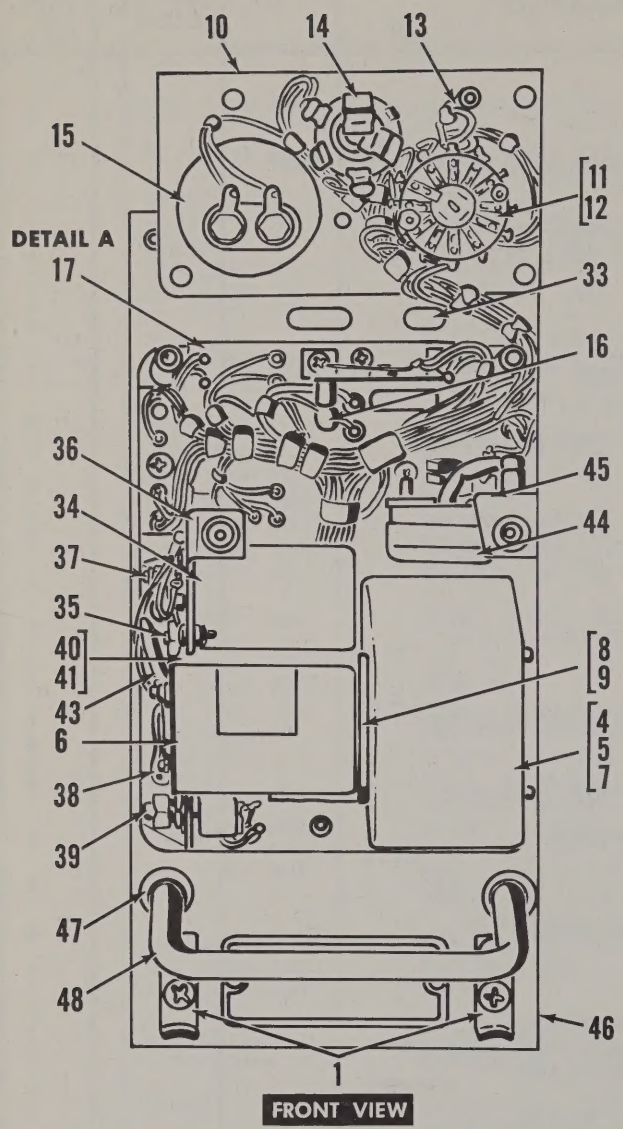
10
14
13
15
11
12
DETAIL A
17
33
16
36
45
34
44
37
35
40
41
43
6
38
39
8
9
4
5
7
47
48
46
1
FRONT VIEW

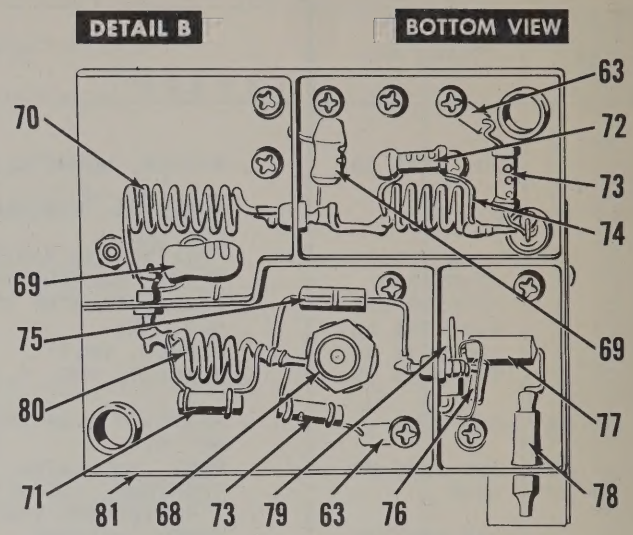
DETAIL B
BOTTOM VIEW
63
70
72
73
74
69
75
69
80
77
71
78
81
68
73
79
63
76

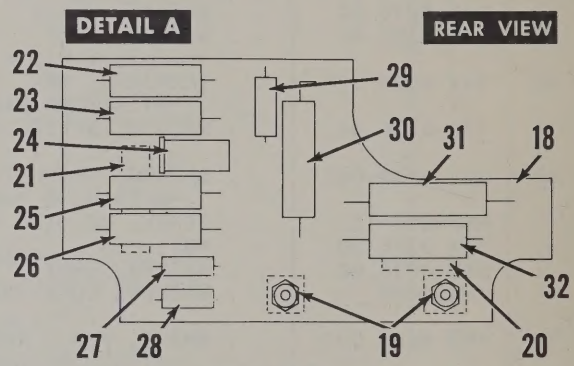
DETAIL A
REAR VIEW
22
29
23
24
30
31
18
21
25
26
32
27
28
19
20

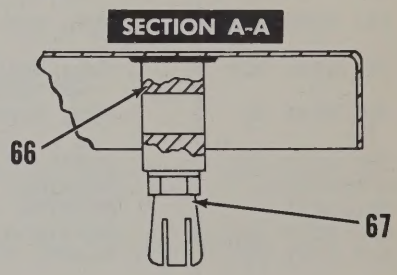
SECTION A-A
66
67

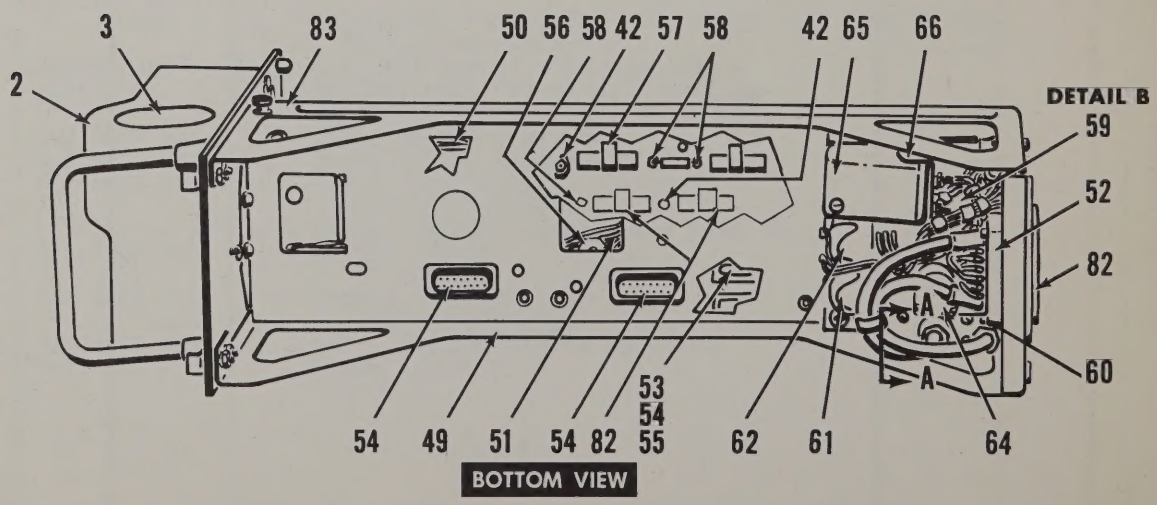
3
83
50
56
58
42
57
58
42
65
66
2
DETAIL B
59
52
82
A
A
60
53
54
54
49
51
54
82
55
62
61
64
BOTTOM VIEW

FIG. & INDEX NO.	PART NO.	NOMENCLATURE 1 2 3 4 5 6 7	USAGE CODE	UNITS PER ASSY.
9-	542 6833 005	CHASSIS ASSEMBLY, WIRED -SEE FIG 1 NHA-		REF
- 1	503 4970 001	. BRACKET		2
		-ATTACHING PARTS-		
	MS35216-26	. SCREW, MACHINE V96906 -343 0170 00-		4
	AN340C6	. NUT, HEX V88044 -313 0045 00-		4
	310 0282 00	. WASHER, LOCK		4
		. . . . *		
- 2	542 6818 002	. COVER, PANEL, ROLLED		1
		-ATTACHING PARTS-		
	542 6518 002	. SCREW, SPECIAL		2
	310 0282 00	. WASHER, LOCK		2
	5133 -12-C	. RING, RETAINER V79136 -340 0250 00-		2
	340 0641 00	. SLEEVE, SPRING		1
	MS35216-35	. SCREW, MACHINE V96906 -343 0182 00-		1
	310 0282 00	. WASHER, LOCK		1
		. . . . *		
- 3	542 6807 002	. SCREEN, BLOWER		1
- 4	542 3209 002	. COVER, BLOWER		1
		-ATTACHING PARTS-		
	MS35216-1	. SCREW, MACHINE V96906 -343 0122 00-		4
	310 0275 00	. WASHER, LOCK		4
		. . . . *		
- 5	542 6757 004	. HOUSING, BLOWER		1
- 6	25A556	. MOTOR, DIRECT CURRENT V25140 -230 0273 00- B1		1
		-ATTACHING PARTS-		
	MS35216-11	. SCREW, MACHINE V96906 -343 0132 00-		2
	310 0279 00	. WASHER, LOCK		2
		. . . . *		
- 7	009 3006 00	. IMPELLER, FAN, CENTRIFUGAL		1
- 8	542 6515 002	. BRACKET, BLOWER		1
- 9	543 5197 002	. PLATE, BLOWER, MTG, TAPPED		1
		-ATTACHING PARTS-		
	MS35200-25	. SCREW, MACHINE V96906 -342 0062 00-		1
		. . . . *		
- 10	542 6706 003	. PANEL, CONTROL		1
		-ATTACHING PARTS-		
	MS35200-14	. SCREW, MACHINE V96906 -342 0046 00-		2
		. . . . *		
- 11	96212-A2	. SWITCH V81716 -259 0873 00- S1A		1
- 12	1400 SPECIAL	. KNOB V72512 -281 0280 00-		1
		-ATTACHING PARTS-		
	334 0266 00	. NUT, HEX		1
	1714-05	. WASHER, LOCK V78189 -373 0090 00-		1
		. . . . *		
- 13	4040	. TERMINAL, LUG V77147 -304 0332 00-		1
		-ATTACHING PARTS-		
	MS35200-12	. SCREW, MACHINE V96906 -342 0044 00-		1
	313 0132 00	. NUT, HEX		1
	310 0279 00	. WASHER, LOCK		1
		. . . . *		
- 14	JJ-033	. JACK, TELEPHONE V81350 -358 1050 00- J5		1
		-ATTACHING PARTS-		
	334 4120 00	. NUT, HEX		1
	1720-02	. WASHER, LOCK V78189 -373 0085 00-		1
		. . . . *		
- 15	Z-10986	. METER, TEST V16688 -458 0415 00- M1		1
- 16	MAZDA 327	. LAMP, INDICATOR V24446 -262 0179 00- DS1		1
- 17	543 5206 003	. BOARD, RESISTOR, SOLDERED TB1		1
		-ATTACHING PARTS-		
	MS35216-12	. SCREW, MACHINE V96906 -343 0133 00-		3
	MS35216-16	. SCREW, MACHINE V96906 -343 0137 00-		1
		. . . . *		

FIG. & INDEX NO.	PART NO.	NOMENCLATURE 1 2 3 4 5 6 7	USAGE CODE	UNITS PER ASSY.
9-				
- 18	543 5205 003	. . BOARD, RESISTOR, STAKED		1
- 19	543 5203 00	. . BRACKET, LIGHT, RIVETED		1
		-ATTACHING PARTS-		
	MS35216-12	. . SCREW, MACHINE V96906 -343 0133 00-		2
	313 0132 00	. . NUT, HEX		2
		. . . . *		
- 20	RN65B1961F	. . RESISTOR, 1950 OHMS V81349 -705 7110 00- R13		1
R - 21	747 5323 00	. . RESISTOR, 14 OHMS **R19**		1
- 22	RN65B3832F	. . RESISTOR, 38,300 OHMS V81349 -705 7172 00- R6		1
- 23	RN65B2873F	. . RESISTOR, 287,000 OHMS V81349 -705 7214 00- R7		1
- 24	SV-808	. . DIODE V99180 -353 2595 00- CR3		1
- 25	RN65B1211F	. . RESISTOR, 1210 OHMS V81349 -705 7100 00- R10		1
- 26	RN65B90R9F	. . RESISTOR, 90,900 OHMS V81349 -705 7046 00- R5		1
- 27	747 5322 00	. . RESISTOR, 12 OHMS R20		1
- 28	RC20GF822J	. . RESISTOR, 8200 OHMS V81349 -745 1390 00- R9		1
- 29	RC20GF470K	. . RESISTOR, 47 OHMS V81349 -745 1296 00- R23		1
- 30	RN70B10R0F	. . RESISTOR, 10 OHMS V81349 -705 7500 00- R11		1
- 31	747 9433 00	. . RESISTOR, 10 OHMS R12		1
- 32	RC42GF684J	. . RESISTOR, 680,000 OHMS V81349 -745 5770 00- R8		1
- 33	542 6519 002	. WINDOW, PLASTIC		1
		-ATTACHING PARTS-		
	MS35216-1	. SCREW, MACHINE V96906 -343 0667 00-		3
	AN340C2	. NUT, HEX V88044 -313 0037 00-		3
		. . . . *		
- 34	96-0177-00	. FILTER V88063 -678 1113 00- L7		1
		-ATTACHING PARTS-		
	MS35216-12	. SCREW, MACHINE V96906 -343 0133 00-		2
	313 0132 00	. NUT, HEX		2
	310 0279 00	. WASHER, LOCK		2
		. . . . *		
- 35	HD-465	. TRANSISTOR V97966 -352 0056 00- Q1		1
		-ATTACHING PARTS-		
	313 0188 00	. NUT, HEX		1
	541 1246 003	. WASHER, COPPER		1
	541 1242 003	. WASHER, PLASTIC		1
	541 1244 003	. WASHER, MICA		2
		. . . . *		
- 36	543 5204 002	. BRACKET, FILTER, ROLLED		1
		-ATTACHING PARTS-		
	MS35216-12	. SCREW, MACHINE V96906 -343 0133 00-		1
	310 0045 00	. WASHER, FLAT		1
	310 0279 00	. WASHER, LOCK		1
		. . . . *		
- 37	380 1662 00	. RESISTOR, 100 OHMS R17		1
		-ATTACHING PARTS-		
	334 0266 00	. NUT, HEX		1
	1714-05	. WASHER, LOCK V78189 -373 0090 00-		1
		. . . . *		
- 38	4040	. TERMINAL, LUG V77147 -304 0332 00-		1
		-ATTACHING PARTS-		
	MS35216-12	. SCREW, MACHINE V96906 -343 0133 00-		1
	310 0279 00	. WASHER, LOCK		1
		. . . . *		
- 39	380 1665 00	. RESISTOR, 2500 OHMS R1		1
		-ATTACHING PARTS-		
	334 0266 00	. NUT, HEX		1
	1714-05	. WASHER, LOCK V78189 -373 0090 00-		1
		. . . . *		
- 40	RW30V500	. RESISTOR, FIXED, 50 OHMS V81349 -747 0225 00- R22		1
- 41	015 0552 00	. POST, RESISTOR, MTG		1
		-ATTACHING PARTS-		
	MS35216-26	. SCREW, MACHINE V96906 -343 0170 00-		2